Bilateral Trade Liberalization, Exports and Technology Upgrading: Evidence on the Impact of MERCOSUR on Argentinean Firms*

Paula Bustos
CREI and Universitat Pompeu Fabra
July 2007

Abstract

Several empirical studies have documented that exporters have positive performance characteristics relative to firms only servicing the domestic market. Whether these findings imply that policies that expand export opportunities have a positive impact on firm performance depends on whether exporting causes better performance or better firms self select into the export market. In this paper I investigate the impact of a multilateral trade agreement (MERCOSUR) on entry in the export market and investment in technology within the framework of a simple model that introduces technology choice in Melitz (2003) model. In the model, a reduction in variable export costs increases exporting revenues, inducing more firms to enter the export market, and to adopt new technologies. The empirical identification of the effect of falling Brazilian tariffs on entry in the export market and technology upgrading by Argentinean firms is based in the change in Brazilian tariffs across 4-digit-SIC industries. I find that the average reduction in export tariffs (0.24) increases the probability of entry in the export market by 0.10 and increases spending in technology by 0.20 log points.

* I thank Pol Antras, Gino Gancia , Elhanan Helpman, Marc Melitz, Thijs Van Rens, and seminar participants at the NBER ITI Summer Institute, LSE, NYU, New York Fed, Universidade Nova de Lisboa, U. T. di Tella, U. de San Andres, U.P.F and CREI for helpful comments and suggestions.

1. Introduction

Several empirical studies have documented that exporters have positive performance characteristics relative to firms only servicing the domestic market.[1] Exporters are larger, have higher labor productivity, capital-intensity, technology-intensity and pay higher wages. Whether these findings imply that policies that expand export opportunities, like multilateral trade liberalizations, have a positive impact on firm performance depends on whether exporting causes better performance or ex-ante good firms become exporters.

There is ample evidence that the more productive firms self select into the export market, which can be rationalized by the model of trade with heterogeneous firms developed by Melitz (2003). In Melitz's model trade liberalization increases aggregate productivity through a selection effect, as it reallocates market shares to more productive firms and produces the exit of less productive firms. In this paper I analyze whether trade liberalization can also induce firms to invest in technology upgrading to improve their productivity. For that purpose, I develop a simple model that introduces technology choice into Melitz (2003) model and test its predictions in the context of the launching of a multilateral trade agreement (MERCOSUR).

In the model, firms can enter a monopolistically competitive industry by paying a fixed entry cost, after which their productivity will be revealed. After entry they can produce using a technology that features increasing returns to scale (a fixed cost and constant marginal cost). Heterogeneity in productivity can be interpreted in two ways: first, more productive firms have a lower marginal production cost in the sense that they produce more output per unit of labor; second, more productive firms produce a good of higher quality, in the sense that consumers are willing to pay more for the same amount of the good. Up to this point the setup is identical to Melitz (2003), but in addition, after observing their productivity, firms can choose to pay a fixed cost to adopt a new technology that will produce a proportional reduction in their marginal cost, or a proportional increase in the quality of the good. Then, in this setup, there is a part of firm

[1] The empirical studies include Bernard and Jensen (1999) for the U.S.; Clerides, Lach and Tybout (1998) for Mexico, Colombia and Morocco.

productivity that is the result of luck but firms can also take actions to increase their productivity. A simple interpretation would be that before entering an industry firms engage in product development, but the value of that product/its marginal production cost is revealed only after it has been developed and the cost of product development is sunk. At the production stage, firms can take actions to increase the quality of the product or further reduce its marginal cost, by paying a per period extra fixed production cost.

Firms that export face both variable and fixed exporting costs, and the latter implies that only the most productive firms enter the export market.[2] Similarly, the presence of fixed technology adoption costs also implies that only the most productive firms adopt the new technology. This result is due to the fact that in the model, a proportional reduction in marginal cost produces a proportional increase in revenues, which will be higher in value the higher are initial revenues. Then, only firms with high enough revenues will find paying the fixed cost of technology adoption profitable.

In this setup, a reduction in variable export costs increases exporting revenues, making it profitable for more firms to enter the export market, and to adopt new technologies. A reduction in trade costs increases revenues because it reduces the price firms charge abroad and, as the elasticity of demand is bigger than one, quantities sold increase more than proportionally. Then, revenues increase, and as the benefit of technology upgrading is proportional to revenues and its cost is fixed, more firms will have enough revenues to make technology adoption profitable.[3]

The bilateral trade liberalization that took place between Argentina and Brazil starting in the early 1990's provides a unique set up to test the causal relationship between falling export costs and technology upgrading. Brazilian tariffs fell from an average of 29% in

[2] The result that only the most productive firms enter the export market is due to their higher potential exporting revenues: as they have a lower marginal production cost charge a lower price, which produces a more than proportional increase in their sales because demand is elastic, thus exporting revenues are higher for more productive firms while fixed exporting costs are the same for all firms. As a result, only the most productive firms will find entering the export market profitable.

[3] The relationship between exporting and quality upgrading has been proposed by Verhoogen (2004) who develops a model where increased trade with more developed countries increases production of high quality goods and tests it in the context of Mexico's 1994 devaluation. The mechanism for quality upgrading in his model is not increased revenues for exporters but the higher valuation for high quality goods of consumers in developed countries. In this paper the analysis focuses on trade liberalization between countries of similar level of development, thus the focus is on increased revenues for exporters to a symmetric country.

1991 to zero in 1995 in all industries (with the exception of automobiles and sugar). The impact of MERCOSUR on Argentina's exports was impressing: between 1992 and 1996, exports to Brazil quadrupled, while exports to the rest of the world increased only 60%. As a result, the growth in exports to Brazil explains 50% of the growth in total Argentinean exports in that period.

I analyze a panel of 1388 Argentinean manufacturing firms covering the period 1992-1996. This data set permits to build a comprehensive measure of investment in technology, as it includes several dimensions of adoption of new technologies such as spending in computers and software; payments for technology transfers and patents; and spending on equipment, materials and labor related to innovation activities performed within the firm.[4]

In a first analysis of the data I check whether observed characteristics of exporters are consistent with the ones predicted by the model. In the model, underlying productivity differences produce a sorting of firms into three groups: the low productivity firms only serve the domestic market and use the old technology, the medium productivity firms still use the old technology but also export, and the most productive firms both export and use the new technology. In this setting a reduction in variable trade costs will increase exporting revenues thus inducing firms in the middle-range of the productivity distribution to enter the export market and upgrade technology.

The patterns observed in the data are consistent with the proposed model: if we compare firms in the same industry (at the 4-digit-SIC level), firms that were already exporting in 1992 have a 0.37 log points higher level of spending in technology per worker than firms that don't export before and after liberalization, while firms that would enter the export market after liberalization, but still do not export in 1992, are not significantly more technology intensive than firms that don't export in 1992 and would not enter the export market after liberalization. In contrast, after liberalization new exporters become more and technology-intensive than firms that do not export, increasing their spending in technology per worker 0.34 log points faster. Interestingly, firms that

[4] Such as R&D, adaptation of new products or production processes, technical assistance for innovations in production, organization, commercialization, engineering and industrial design.

were already exporting in 1992 also increase spending in technology 0.27 log points faster than firms that never export.

The patterns in the data described above show that there is a coincidence between entry in the export market and technology upgrading, but can't establish whether it is expanded export opportunities that cause technology adoption or viceversa, or whether both are caused by a third factor. Then, a second step in the empirical analysis attempts to establish causality between exporting and technology adoption, by linking these outcomes directly to the reduction in Brazil's tariffs for imports from Argentina.

The empirical identification of the effect of falling export costs on entry in the export market and technology upgrading by both continuing exporters and new entrants in the export market is based on variation in the change in Brazilian tariffs across 4-digit-SIC industries. The model predicts that in industries where Brazilian tariffs fell more there will be more entry in the export market and also more technology upgrading by both continuing exporters and new exporters.

Then, to asses the direct impact of falling tariffs on the export decision I estimate the change in the probability of a firm entering the export market as a function of the variation in Brazil's tariffs at the industry level. I find that firms in sectors with a higher reduction in tariffs are more likely to enter the export market. The average reduction in tariffs (0.24) increases the probability of entry in the export market by 0.10 percentage points.

I also estimate the change in spending in technology per worker as a function of the change in tariffs and find that firms increase their spending in technology faster in industries where tariffs fall more. The average reduction in Brazil's tariffs increases spending in technology by 0.20 log points.

Next, I investigate whether the channel suggested by the model is at work: the drop in export tariffs induces technology upgrading through the increase in exporting revenues, versus the alternative explanation that the mere act of exporting causes technology upgrading as it exposes firms to technology and know how abroad. If the increase in export revenues is inducing technology upgrading we should observe technology upgrading not only in new exporters but also in firms that were already exporting in 1992 and face a reduction in tariffs. In fact, the reduction in tariffs has the same positive effect

on the change in spending in technology when restricting the sample to firms that were already exporting in 1992. Finally, the same effect is found when the sample is restricted to firms that were not exporting in 1992, documenting the effect of tariff reductions on technology adoption acting through entry.

The results above suggest that entry in the export market and technology upgrading were both caused by the reduction in Brazil's tariffs, but an alternative explanation is that the change in Brazil's tariffs is correlated with other industry-level trends that are causing both entry and technology upgrading. Thus, I perform a series of robustness checks to assess whether the empirical identification strategy is correctly capturing the effects of trade liberalization.

The results reported above are based on a generalized differences and differences estimation, where the sources of variation are differential changes in Brazil's tariffs across time (1996-1992) and across IV- digit SIC industries. This estimation is based on the assumption that these changes are not correlated with unobserved industry trends that might be correlated with changes in export status or changes in spending in technology. To check whether this assumption is correct, I include industry trends at the 2-digit-SIC level,[5] and a series of exogenous industry characteristics at the 4-digit-SIC level like skill and capital intensity of the industry in the U.S., and the elasticity of substitution of demand. In addition, other changes in tariffs are included, like the change in Argentina's import tariffs with respect to Brazil and the rest of the world. The results are robust to all these controls, with point estimates still being significant at the 5% level. As a final check that results are not driven by unobserved industry-level shocks in the domestic market that could be correlated with changes in tariffs I show that changes in Brazil's tariffs are not correlated with growth in domestic sales.

The subject of this paper is related to a series of empirical studies on the impact of exporting on firm productivity. This paper focuses on a different outcome, technology upgrading, which has the advantage of studying a particular mechanism (a reduction in variable export costs) and a particular channel (technology upgrading) through which

[5] It is not possible to include industry trends at the 4-digit level as that is the maximum level of desegregation of the tariff data.

exporting can affect firm performance, and the disadvantage of making a comparison to the existing literature harder.

The survey does not provide a good measure of labor or total factor productivity as it does not contain information on value added, and capital stock per firm. Still, if technology upgrading is expected to produce increases in labor and total factor productivity, the results on this paper can be related to the existing literature. Bernard and Jensen (1999) report that in the U.S. exporters have higher productivity than non exporters, but this is because ex-ante more productive firms become exporters, while there are no effects of exporting on productivity. Clerides, Lach and Tybout (1998) also show evidence that the positive association between exporting and productivity is explained by self-selection of the good plants in Colombia, Mexico and Morocco. These two studies base their conclusions on the comparison of exporters and non exporters across time and not on variation in a trade policy variable. The evidence reported in this paper suggests that causality can also run in the opposite direction, as reductions in variable export costs induce both entry in the export market and technology upgrading. Then, firms entering the export market are not only more productive ex-ante but they also take actions (investment in technology) targeted towards increasing their productivity. This finding is consistent with the evidence reported in Trefler (2004) for the impact of the Canada-U.S. Free Trade Agreement on Canadian plants: he finds that Canadian plants in industries with higher U.S. tariff concessions had faster productivity growth.

The theoretical model presented in this paper is a general equilibrium version of the model in Bustos (2005). The insight that expanded export opportunities induce more firms to upgrade technology was first developed by Yeaple (2005). In his model firms are ex-ante homogeneous and heterogeneity in exporting and technology choice is an equilibrium outcome: as the low marginal cost technology uses skilled-labor more intensively wages adjust in such a way that in equilibrium all firms are indifferent between not exporting and using the low technology or exporting and using the high technology. In the model presented in this paper labor is homogeneous and heterogeneity in exporting and technology choice is the result of ex-ante heterogeneity in productivity. Additionally, there is not a full coincidence between exporting and using the high technology as the least productive exporters might choose to use the low technology.

These last two features of the model are important to interpret the empirical findings reported above, where new exporters were more productive than never exporters before trade liberalization and firms that were already exporting also upgrade technology when variable trade costs fall.

The remaining of the paper is organized as follows. The next section presents the theoretical model and derives the empirical predictions on the effects of trade liberalization on entry in the export market and technology upgrading. Section 3 describes the trade liberalization episode and the data set. Section 4 presents the empirical strategy and tests the predictions of the model. Section 5 concludes.

2. Theory

This section develops a simple model of the decision to enter the export market and upgrade technology by heterogeneous firms. I will consider an economy consisting of a single monopolistically competitive industry where firms produce differentiated products under increasing returns to scale, and using a single factor of production, labor, as in Krugman (1979, 1980). Firms are heterogeneous in productivity and face fixed exporting costs as in Melitz (2003), and can choose to increase their productivity by paying a fixed technology adoption cost, as in Yeaple (2005). I first present the closed economy model, and later its open economy version where two symmetric countries trade.

2.1 Closed Economy

Set up of The Model

Demand

There is a representative consumer with CES preferences over a continuum of varieties of a good:

$$U = \left[\int_{\omega \in \Omega} q(\omega)^{\rho} \, d\omega \right]^{\frac{1}{\rho}} \qquad 0 < \rho < 1$$

Consumers maximize (1) subject to the budget constraint:

$$\int_{\omega \in \Omega} p(\omega) q(\omega) d\omega = E$$

Then, demand for a particular variety is:

$$q(\omega) = \frac{E}{P}\left(\frac{p(\omega)}{P}\right)^{-\sigma}$$

where $\sigma = 1/1-\rho > 1$ is the constant elasticity of substitution and

$$P = \left[\int_{\omega\in\Omega} p(\omega)^{1-\sigma} d\omega\right]^{\frac{1}{1-\sigma}} \tag{1}$$

Supply

The supply side is characterized by monopolistic competition. Each variety is produced by a single firm, and there is free entry into the industry. Firms produce varieties using a technology that features a constant marginal cost and a fixed cost, both in terms of labor. Firms are heterogeneous in their productivity in the sense that marginal labor costs varies across firms using the same technology. This idiosyncratic component of labor productivity will be indexed by φ, that also indexes firms and varieties. Firms also can choose to upgrade their technology in the following sense: by paying an additional fixed cost they can reduce their marginal cost of production. This can be represented as a choice between two different technologies *l* and *h*, where *h* features a higher fixed cost and a lower marginal cost. The resulting total cost functions under each technology would be:

$$\begin{aligned} TC_l(\varphi) &= \left(f + \frac{q(\varphi)}{\varphi}\right) \\ TC_h(\varphi) &= \left(f\eta + \frac{q(\varphi)}{\gamma\varphi}\right) \end{aligned} \tag{2}$$

where $\eta > 1$ and $\gamma > 1$.

Entry and timing

Before starting to produce a given variety firms face uncertainty regarding their productivity level (φ). Upon entry they pay a fixed cost consisting of f_e units of labor, and draw their productivity level from a known cumulative distribution function

$G(\varphi) = 1 - \varphi^{-k}$. After observing their productivity they decide whether to exit the market or start producing with one of the technologies in eq. (2). Finally, in every period there is an exogenous probability of exit (δ).

Firm Behavior

After observing their productivity (φ) firms choose the profit maximizing price and technology given the equilibrium price level (*P*). First they calculate the price that attains the maximum profits under each technology. Then, they choose the technology that attains higher profits. If profits are negative under the best technology choice they exit.

Profit maximization

Under CES preferences the profit maximizing price is a constant markup over marginal costs. Then, a firm with productivity φ using technology *l* will charge the following price:

$$p_l(\varphi) = \frac{1}{\rho}\frac{1}{\varphi}$$

the resulting quantity sold, revenues and profits are:

$$\begin{aligned} q_l(\varphi) &= EP^{\sigma-1}(\rho\varphi)^{\sigma} \\ r_l(\varphi) &= p_l(\varphi)q_l(\varphi) = E(P\rho)^{\sigma-1}\varphi^{\sigma-1} \\ \pi_l(\varphi) &= \frac{1}{\sigma}r_l(\varphi) - f = \frac{1}{\sigma}E(P\rho)^{\sigma-1}\varphi^{\sigma-1} - f \end{aligned} \tag{3}$$

For firms using technology h prices, quantities sold, revenues and profits are :

$$\begin{aligned} p_h(\varphi) &= \frac{1}{\rho}\frac{1}{\varphi}\frac{1}{\gamma} \\ q_h(\varphi) &= EP^{\sigma-1}(\rho\varphi)^{\sigma}\gamma^{\sigma} \\ r_h(\varphi) &= p_h(\varphi)q_h(\varphi) = E(P\rho)^{\sigma-1}\varphi^{\sigma-1}\gamma^{\sigma-1} \\ \pi_h(\varphi) &= \frac{1}{\sigma}r_h(\varphi) - f\eta = \frac{1}{\sigma}E(P\rho)^{\sigma-1}\varphi^{\sigma-1}\gamma^{\sigma-1} - f\eta \end{aligned} \tag{4}$$

Technology choice

Firms will use the technology that attains higher profits, then they will use technology *h* if:

$$\pi_h(\varphi) > \pi_l(\varphi) \Leftrightarrow \frac{1}{\sigma} E(P\rho)^{\sigma-1} \varphi^{\sigma-1} \left(\gamma^{\sigma-1} - 1\right) > f(\eta - 1) \tag{5}$$

Note that the cost of technology upgrading (the RHS of eq. 5) is the same for all firms while the benefit (the LHS of eq. 5) is increasing in the firm's productivity. Then, technology adoption will be characterized by a cutoff productivity level φ_h above which all firms will use technology *h*. Technology choice is represented in Figure 1, where π_h are profits for using technology h as a function of productivity $\left(\varphi^{\sigma-1}\right)$ and π_l are profits for using techology l.

Figure I: Technology Choice

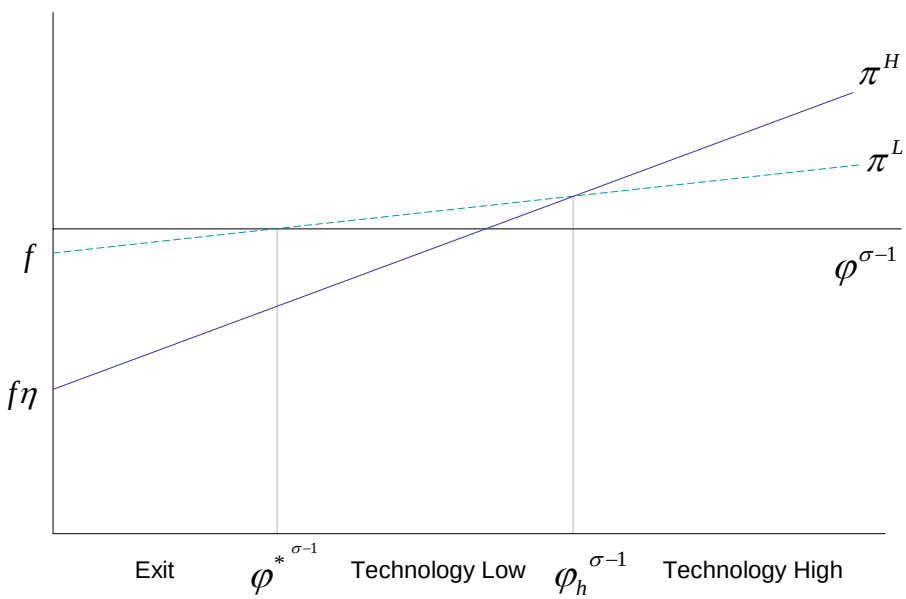

Exit

The expected present value of profits is:

$$v(\varphi) = \max\left\{0, \sum_{t=s}^{\infty} (1-\delta)^{t-s} \pi(\varphi)\right\} = \max\left\{0, \frac{1}{\delta}\pi(\varphi)\right\}$$

As profits are increasing in productivity, firms below a certain threshold φ^* will make negative profits and exit. Note that, as only the most productive firms adopt technology *h*, this threshold will be defined by the zero profit condition under technology *l*:

$$\pi_l(\varphi^*) = \frac{1}{\sigma} E(P\rho)^{\sigma-1}(\varphi^*)^{\sigma-1} - f = 0 \tag{6}$$

Industry Equilibrium

To solve for the equilibrium price (*P*), number of firms (*M*) and the distribution of active firms' productivities in the economy it will be convenient to write all the equilibrium conditions as functions of the exit cutoff (φ^*) which in turn will be determined by the free entry condition. I will first write φ_h as a function of φ^*.The productivity cutoff for adopting technology *h* is given by $\pi_h(\varphi^h) = \pi_l(\varphi^h)$, which implies:

$$\left(\gamma^{\sigma-1} - 1\right)\frac{1}{\sigma} E(P\rho)^{\sigma-1}(\varphi^h)^{\sigma-1} = f(\eta - 1) \tag{7}$$

Next, φ^h can be expressed as a function of φ^* using the definition of the exit cutoff (eq. 6) to substitute for the price index (*P)* and income (*E)* in eq. 7:

$$\varphi^h = \varphi^* \left(\frac{\eta - 1}{\gamma^{\sigma-1} - 1} \right)^{\frac{1}{\sigma-1}} \tag{8}$$

Then, as long as $\frac{\varphi^h}{\varphi^*} = \left(\frac{\eta-1}{\gamma^{\sigma-1}-1}\right)^{\frac{1}{\sigma-1}} > 1$, which is the case when $\eta > \gamma^{\sigma-1}$, only the most productive firms use technology h and the fraction of surviving firms adopting technology *h* is: $\frac{1-G(\varphi^h)}{1-G(\varphi^*)} = \left(\frac{\varphi^h(\varphi^*)}{\varphi^*}\right)^{-k} = \left[\left(\frac{\eta-1}{\gamma^{\sigma-1}-1}\right)^{\frac{1}{\sigma-1}}\right]^{-k}$.

It will also be useful to define $\tilde{\varphi}$ as the ex-post weighted average productivity level of surviving firms, where ex-post means that for firms adopting technology *h* effective productivity is $\gamma\varphi$, and ex-post productivities are weighted by the elasticity of substitution to reflect their impact on the price index:

$$\tilde{\varphi} = \left(\int_{\varphi^* < \varphi < \varphi_h} (\varphi)^{\sigma-1} \frac{g(\varphi)}{1-G(\varphi^*)} d\varphi + \int_{\varphi_h < \varphi} \gamma^{\sigma-1} (\varphi)^{\sigma-1} \frac{g(\varphi)}{1-G(\varphi^*)} d\varphi \right)^{\frac{1}{\sigma-1}} \tag{9}$$

The average productivity level of surviving firms $\tilde{\varphi}$ can also be expressed as a function of the cutoff φ^* by substituting φ^h from eq. (8) in eq. (9). An explicit solution can be obtained by using the Pareto distribution:

$$\tilde{\varphi} = \varphi^* \left\{ \frac{k}{k-(\sigma-1)} \right\}^{\frac{1}{\sigma-1}} \Delta^{\frac{1}{\sigma-1}} \tag{10}$$

where

$$\Delta = 1 + \left(\gamma^{\sigma-1} - 1\right) \left(\left(\frac{\eta - 1}{\gamma^{\sigma-1} - 1} \right)^{\frac{1}{\sigma-1}} \right)^{-k+\sigma-1} \tag{11}$$

As prior to entry firms don't know their productivity level, free entry implies that the present value of expected profits equals the sunk entry cost:

$$f_e = \left[1 - G\left(\varphi^*\right)\right] \frac{1}{\delta} \bar{\pi} \tag{12}$$

where $1 - G\left(\varphi^*\right)$ is the probability of survival and $\bar{\pi}$ are per-period expected profits of surviving firms:

$$\bar{\pi} = \frac{1}{\sigma} E\left(P\rho\right)^{\sigma-1} \tilde{\varphi}^{\sigma-1} - f - f\left(\eta - 1\right) \frac{1 - G\left(\varphi^h\right)}{1 - G\left(\varphi^*\right)} \tag{13}$$

where $\frac{1-G\left(\varphi^h\right)}{1-G\left(\varphi^*\right)}$ is the probability of adopting technology *h*.[6]

[6] To obtain equation 17 note that if $\bar{r}$ are expected revenues of surviving firms:

To solve for the free entry condition (12) it is convenient to express expected profits in terms of the exit cutoff φ^*. Then by substituting (6) in (13) expected profits can be written as a function of φ^*:

$$\bar{\pi} = f\left(\left(\frac{\tilde{\varphi}(\varphi^*)}{\varphi^*}\right)^{\sigma-1} - 1 - (\eta-1)\left(\frac{\varphi^h(\varphi^*)}{\varphi^*}\right)^{-k}\right) \tag{14}$$

and by substituting $\frac{\tilde{\varphi}(\varphi^*)}{\varphi^*}$ by (13) and $\frac{\varphi^h(\varphi^*)}{\varphi^*}$ by (18) average profits can be written as:

$$\bar{\pi} = \left(\frac{\sigma-1}{k-(\sigma-1)}\right) f\Delta \tag{15}$$

Note that expected profits are independent of φ^*, which is due to the use of a Pareto distribution for $G(\varphi)$. In general, changes in φ^* have two effects on expected profits: a direct positive effect as each firm has a higher productivity which makes each firm's profit increase; and an indirect negative effect as a higher φ^* implies productivity of competitors is higher, thus the price index is lower and each firm's profits fall. In the case of a Pareto distribution both effects cancel out, and as a result average profits are independent of the cutoff.

To interpret the formula for expected profits it is convenient to write $f\Delta$ as:

$$f\Delta = f\left\{1 + (\eta-1)\left(\frac{\eta-1}{\gamma^{\sigma-1}-1}\right)^{-\frac{k}{\sigma-1}}\right\} = \left\{f + (f_h - f)\left(\frac{\varphi^h(\varphi^*)}{\varphi^*}\right)^{-k}\right\}$$

$$\bar{r} = \frac{1}{1-G(\varphi^*)}\left[\int_{\varphi^*<\varphi<\varphi_h}\left(E(P\rho)^{\sigma-1}(\varphi)^{\sigma-1}\right)g(\varphi)d\varphi + \int_{\varphi_h<\varphi}\left(E(P\rho)^{\sigma-1}\gamma^{\sigma-1}(\varphi)^{\sigma-1}\right)g(\varphi)d\varphi\right]$$

$$\bar{r} = E(P\rho)^{\sigma-1}\frac{1}{1-G(\varphi^*)}\left[\int_{\varphi^*<\varphi<\varphi_h}\left((\varphi)^{\sigma-1}\right)g(\varphi)d\varphi + \int_{\varphi_h<\varphi}\left(\gamma^{\sigma-1}(\varphi)^{\sigma-1}\right)g(\varphi)d\varphi\right]$$

$$\bar{r} = E(P\rho)^{\sigma-1}\tilde{\varphi}^{\sigma-1}$$

where $f_h - f = (\eta - 1) f$ is the fixed cost of technology *h* and $\left(\frac{\varphi^h(\varphi^*)}{\varphi^*}\right)^{-k}$ is the fraction of firms that use technology *h*, then $f\Delta$ can be interpreted as the average fixed production cost of surviving firms. Note that if there was only one technology available then average profits would be the same as in (15) but with $\Delta = 1$. In that case, expected profits take the simple form of a multiple of the revenues of the marginal firm which must equal the fixed production cost (*f*). In the case where technology h becomes available expected profits increase by the additional fixed production cost $(f_h - f)$ of the marginal firm adopting technology h multiplied by the fraction of firms adopting technology h : $\left(\frac{\varphi^h(\varphi^*)}{\varphi^*}\right)^{-k}$. The option to upgrade technology thus increases expected profits, the reason being that the marginal adopting firm gets no increase in profits for adopting, but all the firms above must be making positive adoption profits as adoption generates higher revenues for them but they pay the same the same fixed cost as the marginal adopting firm.

Free entry implies that the present value of expected profits: $(\varphi^*)^{-k} \frac{1}{\delta} \bar{\pi}$ must equal the sunk entry cost: f_e. The solution for the entry cutoff is then:

$$\varphi^* = \left[\frac{f\Delta}{\delta f_e} \left(\frac{\sigma - 1}{k - (\sigma - 1)} \right) \right]^{\frac{1}{k}} \tag{16}$$

The exit cutoff in the case of only one technology is the one corresponding to $\Delta = 1$, then as $\Delta = 1 + \left[(\gamma^{\sigma-1} - 1)^{\frac{k}{\sigma-1}} (\eta - 1)^{1 - \frac{k}{\sigma-1}} \right] > 1$ the exit cutoff increases in the case firms can choose to upgrade technology. The reason is that the most productive firms can increase their profits by adopting technology h, which increases expected profits and induces entry. As a result, the price index falls (or wages increase) so that the least productive firms make negative profits and exit.

By substituting (16) in (8) the productivity cutoff to adopt technology h can be obtained:

$$\varphi^h = \left\{ \frac{f}{\delta f_e} \left(\frac{\sigma - 1}{k - \sigma - 1} \right) \right\}^{\frac{1}{k}} \left(\frac{\eta - 1}{\gamma^{\sigma-1} - 1} \right)^{\frac{1}{\sigma-1}} \Delta^{\frac{1}{k}} \tag{17}$$

Average productivity of surviving firms can be obtained by substituting eq. (16) in eq. (9):

$$\tilde{\varphi} = \left(\frac{f}{\delta f_e}\right)^{\frac{1}{k}} \left(\frac{(\sigma-1)^{\frac{1}{k}} k^{\frac{1}{\sigma-1}}}{[k-(\sigma-1)]^{\frac{1}{k}+\frac{1}{\sigma-1}}}\right) \Delta^{\frac{1}{k}+\frac{1}{\sigma-1}} \tag{18}$$

Welfare can be measured by the real wage, which is the inverse of the price index (P), as the wage is the numeraire. The price index can be written as a function of average productivity and the measure of firms M by changing the integration variables in equation (1):

$$P^{1-\sigma} = \int_{\varphi \geq \varphi^*} p(\varphi)^{1-\sigma} M \frac{g(\varphi)}{1-G(\varphi^*)} d\varphi = M\left(\rho \tilde{\varphi}\right)^{\sigma-1} \tag{19}$$

To solve for the measure of firms note that it can be obtained by dividing total revenue in the economy by average revenue $\left(M = \frac{E}{\bar{r}}\right)$. By the equality of income and expenditure, $E = L$ and $\bar{r}$ can be obtained from average profits: $\bar{r} = \sigma\left(\bar{\pi} + f\right)$, then $M = \frac{L}{\sigma\left(\bar{\pi}+f\right)}$, and substituting for $\bar{\pi}$ from eq. (15)

$$M = \frac{L}{\sigma f \Delta\left(\frac{k}{k-(\sigma-1)}\right)} \tag{20}$$

The solution for the price level can then be obtained by substituting eq. (20) and eq. (18) in (19):

$$P = \frac{1}{\rho}\left(\frac{\sigma}{L}\right)^{\frac{1}{\sigma-1}} (\delta f_e)^{\frac{1}{k}} f^{\frac{1}{\sigma-1}-\frac{1}{k}} \left(\frac{(\sigma-1)}{k-(\sigma-1)}\right)^{-\frac{1}{k}} \Delta^{-\frac{1}{k}} \tag{21}$$

The following subsection discusses the effects of a reduction in the cost of adoption on technology choice and average productivity in the closed economy. It can be useful to build intuition on the workings of the model, but this comparative static result will not be taken to the data so this subsection can be skipped to continue reading the open economy version of the model.

Effects of a reduction in the cost of adoption

The closed economy model can be useful to analyze the effect of a reduction in the relative cost of new technologies in a setting where initial productivity differences can give rise to heterogeneity in the adoption decision. As all variables of interest depend on the cost of adoption η only through Δ, it suffices to note that:

$$\frac{\partial \Delta}{\partial \eta} = \left[1 - \frac{k}{\sigma - 1}\right](\gamma^{\sigma-1} - 1)^{\frac{k}{\sigma-1}}(\eta - 1)^{-\frac{k}{\sigma-1}} < 0$$

because $k > \sigma - 1$. Then, expected profits increase as η falls. To interpret this result note that expected profits are a multiple of expected fixed cost, then when the cost of adoption falls, revenues from adoption must fall, but as the share of firms adopting technology h grows faster $\left(\frac{\varphi^h(\varphi^*)}{\varphi^*}\right)$ expected profits still increase. Thus, in a sense, the reduction on the cost of adoption is reducing the excess profits (w.r.t. the marginal active firm) of the most productive firms that had already adopted, but increases the excess profits of new adopters, and the second effect dominates. This result relies on the assumption that $k > \sigma - 1$, that implies that the density of the firm productivity distribution falls faster than the market share of more productive firms increases which is a necessary assumption for the average productivity in the industry to be finite.

The increase in expected profits would induce entry in the industry and thus the exit productivity cutoff (φ^*) must fall. As both the exit productivity cutoff falls and the share of firms using technology h increases, average productivity in the industry $\left(\tilde{\varphi}\right)$ grows, which reduces the price level (P) and increases welfare $\left(\frac{1}{P}\right)$. At the same time, the measure of firms (M) falls: this is simply the result of the increase in the "average fixed cost" (Δf) in the economy: although the fixed cost to adopt technology h falls, the share of firms adopting increases more than proportionally and as a result the average fixed cost increases. As on average firms are using more labor to cover the fixed production cost an economy of size L would support less firms or varieties in equilibrium. The reduction in the measure of varieties will increase the price index and reduce welfare,

but the net welfare effect of the fall in technology adoption cost is positive as the increase in average productivity overweighs the reduction in varieties.

In sum, a reduction in technology adoption cost will increase welfare by inducing both selection of better firms into the industry and an increase in the productivity of the firms that adopt technology *h*.

2.2 Open Economy

In the absence of trade frictions the open economy model is identical to the closed economy one, except that the relevant size of the economy (L) would increase to incorporate the size of all trading partners. Then, in the solution of the closed economy equilibrium presented above only L would change when opening up to trade, and thus technology adoption would not be affected as φ_h would stay constant. The exit cutoff φ^* would not change either thus average productivity would remain the same. The only effect of opening up to trade would be an increase in the measure of firms, or varieties offered worldwide, increasing welfare through a corresponding fall in the price level, exactly as in Krugman's model (Krugman 1979-1980).

Similarly, if there were only variable trade costs all firms would export and, as will be shown below, a reduction in variable trade costs would have no effect on technology adoption. Thus, I will introduce two types of trade frictions:

1. Per-unit iceberg costs, so that τ units need to be shipped for 1 unit to make it to the foreign country.

2. An initial fixed cost of f_{ex} units of labor to start exporting, incurred after firms have learnt φ .

I will consider the simple case of two symmetric countries that engage in a bilateral trade liberalization, thus all parameters, including τ will be identical for both countries.

Firm Behavior

Profit Maximization

Profits from sales in the domestic market would be identical as in the closed economy (eqs. 3 and 4) with the exception that the price index P now takes into account the prices of varieties imported from foreign. Profits from export sales (under technology *l*, as an example) would be:

$$\pi_l^e(\varphi) = \tau^{1-\sigma} \frac{1}{\sigma} E(P\rho)^{\sigma-1} \varphi^{\sigma-1} - f_x$$

where the symmetry assumption implies that the price index (P) and the expenditure level (E) in foreign are the same as at home. Revenues in the export market are reduced in a fraction $\tau^{1-\sigma}$ reflecting the extra variable trade costs that get translated in a higher price in the export market $p_l(\varphi) = \frac{1}{\rho}\frac{1}{\varphi}\frac{1}{\tau}$ and produce lower revenues because demand is elastic $(\sigma > 1)$. Finally, exporting profits reflect the per-period fixed exporting cost.

To analyze the joint decision of whether to enter the export market and whether to adopt technology *h*, firms compare the total profit of each of the four resulting choices, which are:

Profits if only servicing the domestic market and using technology *l*:

$$\pi_l^d(\varphi) = \frac{1}{\sigma} r_l^x(\varphi) - f = \frac{1}{\sigma} E(P\rho)^{\sigma-1} \varphi^{\sigma-1} - f$$

Profits if only servicing the domestic market and using technology *h*:

$$\pi_h^d(\varphi) = \frac{1}{\sigma} r_l^x(\varphi) - f = \frac{1}{\sigma} E(P\rho)^{\sigma-1} \varphi^{\sigma-1} \gamma^{\sigma-1} - f\eta$$

Profits if also exporting and using technology *l*:

$$\pi_l^x(\varphi) = \frac{1}{\sigma} r_l^x(\varphi) - f = \left(1 + \tau^{1-\sigma}\right) \frac{1}{\sigma} E(P\rho)^{\sigma-1} \varphi^{\sigma-1} - f - f_x$$

Profits if also exporting and using technology *h*:

$$\pi_h^x(\varphi) = \frac{1}{\sigma} r_l^x(\varphi) - f = \left(1+\tau^{1-\sigma}\right)\frac{1}{\sigma} E\left(P\rho\right)^{\sigma-1}\varphi^{\sigma-1}\gamma^{\sigma-1} - f\eta - f_x$$

Exporting and technology choices are represented in Figure 2, where the four possible profits are depicted as a function of firm's productivity (more precisely a transformation of firm's productivity: $\varphi^{\sigma-1}$). The case represented is one where firms sort into four different groups: the least productive firms $\left(\varphi < \varphi^*\right)$ exit, the low productivity firms $\left(\varphi^* < \varphi < \varphi_x\right)$ only serve the domestic market and use technology l , the medium productivity firms $\left(\varphi_x < \varphi < \varphi_h\right)$ still use technology l but also export, and the most productive firms $\left(\varphi_h < \varphi\right)$. both export and use technology h. This case is be obtained when $\varphi^x < \varphi^h$ where φ^x is defined as the level of productivity above which a firm using technology l will find exporting profitable, and φ^h is defined as the level of productivity above which an exporter will find adoption of technology h profitable, as can be seen from figure one. In Bustos (2005) I show that when $\varphi^x < \varphi^h$ the maximum profit function has the shape depicted in figure one: it is the upper envelope of the four profit functions corresponding to each combination of the technology and exporting choices, but using technology h and only servicing the domestic market is always dominated by some other choice, and there is a range of productivity levels where exporting is profitable but adopting technology h is not, so that the marginal exporter uses technology *h*. I will focus in this case $\left(\varphi^x < \varphi^h\right)$ in what follows and provide the necessary parameter restrictions for this ordering of cutoffs to apply.

Figure 2: Exporting and Technology Choice
Maximum Profit Function $\pi(\varphi^{\sigma-1})$

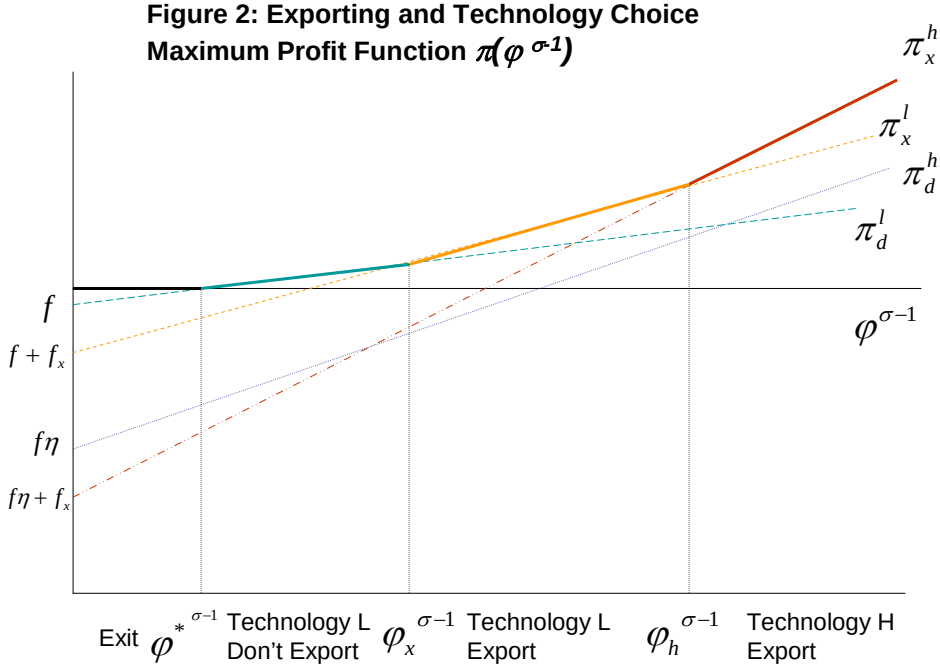

As in the closed economy, to solve for the equilibrium price (P_t), measure of firms (M_t) and the distribution of active firm's productivity in the economy it will be convenient to write all the equilibrium conditions as a function of the exit productivity cutoff φ^*, using the zero profit condition for the marginal active firm to partial out the effects of the aggregate variables (E and P) on firm's profits , and leave the export and technology adoption cutoffs as functions only of the parameters that affect those groups of firms differentially. Then, I next state the conditions for exit, entry in the export market and technology adoption as a function of the exit cutoff.

Exit

For the least productive firms profits are highest when using technology l and only serving the domestic market, then the exit cutoff (φ^*) is be defined by:

$$\pi_l^d(\varphi^*) = 0 \Leftrightarrow \frac{1}{\sigma} E(P\rho)^{\sigma-1}(\varphi^*)^{\sigma-1} - f = 0 \tag{22}$$

Exporting

The marginal exporting firm uses technology *l*, thus the exporting cutoff (φ_x) is defined by:

$$\pi_l^d(\varphi_x) = \pi_l^x(\varphi_x) \Leftrightarrow \tau^{1-\sigma}\frac{1}{\sigma}E(P\rho)^{\sigma-1}\left(\varphi^x\right)^{\sigma-1} - f_x = 0 \tag{23}$$

φ_x can be expressed as a function of φ^* by substituting the zero profit condition for the marginal firm (eq. 22) in eq. (23):

$$\varphi^x = \varphi^*\tau\left(\frac{f_x}{f}\right)^{\frac{1}{\sigma-1}} \tag{24}$$

note that as long as $\tau\left(\frac{f_x}{f}\right)^{\frac{1}{\sigma-1}} > 1$, $\varphi^x > \varphi^*$ thus only the most productive firms export.

Technology Choice

The marginal firm adopting technology h is an exporter, then the adoption cutoff (φ_h) is defined by:

$$\begin{gathered}\pi_h^x(\varphi_h) - \pi_l^x(\varphi_h) = 0 \Leftrightarrow \\ \left(\gamma^{\sigma-1}-1\right)\left(1+\tau^{1-\sigma}\right)\frac{1}{\sigma}E(P\rho)^{\sigma-1}\left(\varphi^h\right)^{\sigma-1} = f(\eta-1)\end{gathered} \tag{25}$$

As in the closed economy, the benefit of technology adoption (the LHS of eq. 25) is proportional to a firm's variable profits which in the open economy case are higher by a factor $\left(1+\tau^{1-\sigma}\right)$ as firms do not only sell at home but also in the export market. Thus, the exporting option increases the profitability of technology adoption. φ_h can be expressed as a function of φ^* by using the zero profit condition for the marginal firm (eq. 22):

$$\varphi^h = \varphi^*\frac{1}{\left(1+\tau^{1-\sigma}\right)^{\frac{1}{\sigma-1}}}\left(\frac{\eta-1}{\gamma^{\sigma-1}-1}\right)^{\frac{1}{\sigma-1}} \tag{26}$$

The share of active firms adopting technology h $\left[\left(\frac{\varphi^h}{\varphi^*}\right)^{-k}\right]$ is higher in the open (eq. 26) than in the closed economy (eq. 8) as the cutoff for adoption falls relative to the exit

cutoff $\left(\frac{\varphi^h}{\varphi^*}\right)$ because $\left(1+\tau^{1-\sigma}\right)^{\frac{1}{1-\sigma}} < 1$. This is so because in the open economy exporting increases revenues, making technology adoption more profitable. Note that this is true only if the marginal firm is a non-exporter; if the marginal firm was an exporter then the share of firms adopting technology *h* would be the same in the closed and open economy and τ would have no impact on technology choice.

By comparing eqs. (24) and (26) we can see that the parameter restriction for $\varphi^h > \varphi^x$ is that technology adoption costs are high enough relative to fixed exporting costs:

$$\frac{\varphi^h}{\varphi^x} = \left(\frac{\tau^{1-\sigma}}{\left(1+\tau^{1-\sigma}\right)} \frac{\frac{\eta-1}{\gamma^{\sigma-1}-1}}{\frac{f_x}{f}} \right)^{\frac{1}{\sigma-1}} > 1$$

Industry Equilibrium

The exit cutoff will be determined by the free entry condition:

$$f_e = \left[1 - G\left(\varphi^*\right)\right] \frac{1}{\delta} \bar{\pi}_t \tag{27}$$

that is identical to the closed economy one except that expected profits $\bar{\pi}_t$ will now account for the possibility of exporting:

$$\bar{\pi}_t = \bar{\pi}_d(\tilde{\varphi}_d) + p_x \bar{\pi}_x(\tilde{\varphi}_x) \tag{28}$$

where $\tilde{\varphi}_d$ is the expected productivity level of home surviving firms that has the same expression as $\tilde{\varphi}$ in the closed economy (eq. 9) and $\bar{\pi}_d(\tilde{\varphi}_d)$ are expected profits from domestic sales, that have the same expression as in the closed economy (eq. 13), $p_x = \frac{1-G(\varphi_x)}{1-G(\varphi^*)}$ is the probability of exporting and $\bar{\pi}_x(\tilde{\varphi}_x)$ are expected exporting profits:

$$\bar{\pi}_x(\tilde{\varphi}_x) = \frac{1}{\sigma} E\left(P\rho\right)^{\sigma-1} \tau^{1-\sigma} \left[\tilde{\varphi}_x\left(\varphi^*\right)\right]^{\sigma-1} - f_x \tag{29}$$

where $\tilde{\varphi}_x$ is the expected productivity level of home firms that export:

$$\tilde{\varphi}_x = \left[\int_{\varphi_x < \varphi < \varphi_h} (\varphi)^{\sigma-1} g(\varphi) d\varphi + \int_{\varphi_h < \varphi} \gamma^{\sigma-1} (\varphi)^{\sigma-1} g(\varphi) d\varphi \right]^{\frac{1}{\sigma-1}} \tag{30}$$

Then, to solve for the free entry condition (eq. 27) we need to write $\bar{\pi}_t$ (eq. 28) as a function of the exit cutoff. $\bar{\pi}_d(\tilde{\varphi}_d)$ can be written as a function of the exit cutoff by substituting for the solution for $\varphi^h(\varphi^*)$ (eq. 26) in eq. 13 and by using the zero profit condition for the marginal firm (eq. 22) to eliminate the aggregate variables (E and P) in eq. (13). $\bar{\pi}_x(\tilde{\varphi}_x)$ (eq. 29) can also be written as a function of the exit cutoff by substituting for the solution for $\varphi^h(\varphi^*)$ and $\varphi^x(\varphi^*)$ (eqs. 24 and 26) in the definition of $\tilde{\varphi}_x$ (eq. 30) to obtain $\tilde{\varphi}_x(\varphi^*)$ and also using the zero profit condition for the marginal firm in the foreign country (that is identical to the one at home (eq. 22) because of the symmetry assumption) to eliminate the aggregate variables (E and P). After some algebra, the solution for expected profits is:

$$\bar{\pi}_t = \left(\frac{\sigma - 1}{k - (\sigma - 1)} \right) f \Delta_t \tag{31}$$

$$\Delta_t = \left\{ 1 + \left(\tau \left(\frac{f_x}{f} \right)^{\frac{1}{\sigma-1}} \right)^{-k} \frac{f_x}{f} + \left[\left(\frac{\eta - 1}{(1 + \tau^{1-\sigma})(\gamma^{\sigma-1} - 1)} \right)^{-\frac{k}{\sigma-1}} (\eta - 1) \right] \right\} \tag{32}$$

To interpret the solution for expected profits note that $f\Delta_t$ can be written as:

$$\Delta_t f = f + \left(\frac{\varphi^x(\varphi^*)}{\varphi^*} \right)^{-k} f_x + \left(\frac{\varphi^h(\varphi^*)}{\varphi^*} \right)^{-k} (f_h - f)$$

Then, the solution for expected profits has the same form as in the closed economy: expected profits are a multiple $\left(\frac{\sigma-1}{k-(\sigma-1)}\right)$ of expected fixed costs $(\Delta_t f)$. Note that this is the case because with a pareto distribution expected profits are a multiple of the variable profits of the marginal firm. In the simplest case of a closed economy with only one technology $\Delta_t = 1$ and then expected profits are a multiple of the variable profits of the marginal surviving firm, which must be equal to f. The addition of the exporting

possibility implies that for exporters, which are a fraction $\left(\frac{\varphi^x(\varphi^*)}{\varphi^*}\right)^{-k}$ of the surviving firms, expected profits will be augmented by a multiple of the variable exporting profits of the marginal exporters which are f_x.Thus, the possibility of exporting will increase expected profits in the same way as in the model in Melitz (2003). Finally, for technology adopters, which are a fraction $\left(\frac{\varphi^h(\varphi^*)}{\varphi^*}\right)^{-k}$ of surviving firms, expected profits will be augmented by a multiple of the variable exporting profits of the marginal adopters which are $(f_h - f)$ exactly as in the closed economy model. Still, the introduction of both the option to export and the option to upgrade technology has an effect on expected profits beyond the sum of the two parts: there is an interaction between the two options as in the open economy the fraction of firms adopting technology h $\left[\left(\frac{\varphi^h(\varphi^*)}{\varphi^*}\right)^{-k}\right]$ is higher than in the closed economy by a factor $\left(1+\tau^{1-\sigma}\right)^{\frac{k}{\sigma-1}} > 1$ because their profits are higher than those of the marginal firm due to the exporting revenues, as discussed above.

By substituting the solution for average profits (eq. 31) in the free entry condition (eq. 27) we can solve for the exit cutoff:

$$\varphi_t^* = \left[\frac{f}{\delta f_e}\left(\frac{\sigma-1}{k-(\sigma-1)}\right)\Delta_t\right]^{\frac{1}{k}} \tag{33}$$

By substituting the solution for the cutoff in eqs. 24 and 26 a solution for the exporting and technology adoption cutoffs can be obtained:

$$\varphi^x = \left[\frac{f}{\delta f_e}\left(\frac{\sigma-1}{k-(\sigma-1)}\right)\right]^{\frac{1}{k}} \Delta_t^{\frac{1}{k}} \tau \left(\frac{f_x}{f}\right)^{\frac{1}{\sigma-1}} \tag{34}$$

$$\varphi^h = \left[\frac{f}{\delta f_e}\left(\frac{\sigma-1}{k-(\sigma-1)}\right)\right]^{\frac{1}{k}} \Delta_t^{\frac{1}{k}} \frac{1}{\left(1+\tau^{1-\sigma}\right)^{\frac{1}{\sigma-1}}} \left(\frac{\eta-1}{\gamma^{\sigma-1}-1}\right)^{\frac{1}{\sigma-1}} \tag{35}$$

And finally, the price index can be obtained by substituting the exit cutoff (eq. 33) in the zero profit condition for the marginal surviving firm (eq. 22):

$$P = \frac{1}{\rho}\left(\frac{\sigma f}{L}\right)^{\frac{1}{\sigma-1}}\left[\frac{f}{\delta f_e}\left(\frac{\sigma-1}{k-(\sigma-1)}\right)\right]^{-\frac{1}{k}}\Delta_t^{-\frac{1}{k}} \tag{36}$$

Bilateral trade liberalization

In this section I analyze the effects of a reduction in variable export costs on entry in the export market and technology upgrading. First, it is easy to note by looking at eqs. (24) and (26) that a reduction in τ will increase the fraction of surviving firms that export $\left(\frac{\varphi_x(\varphi^*)}{\varphi^*}\right)^{-k}$ and the fraction of surviving of firms that use technology *h* $\left(\frac{\varphi_h(\varphi^*)}{\varphi^*}\right)^{-k}$. A fall in τ increases exporting revenues inducing more firms to export and also increases the benefit of technology adoption, inducing more firms to adopt technology *h*. This results in higher expected profits as:

$$\frac{\partial \bar{\pi}_t}{\partial \tau} = \left(\frac{\sigma-1}{k-(\sigma-1)}\right) f \frac{\partial \Delta_t}{\partial \tau} < 0$$

because $\sigma > 1$, $k > (\sigma-1)$ and

$$\frac{\partial \Delta_t}{\partial \tau} = -k\tau^{-k-1}\left(\frac{f_x}{f}\right)^{\frac{-k}{\sigma-1}}\frac{f_x}{f} - k\left(1+\tau^{1-\sigma}\right)^{\frac{k}{\sigma-1}-1}\tau^{-\sigma}\left(\frac{\eta-1}{\left(\gamma^{\sigma-1}-1\right)}\right)^{-\frac{k}{\sigma-1}}(\eta-1) < 0$$

The increase in expected profits induces entry into the industry, and as a result the price index at home falls (or the real wage and welfare increase), as can be seen from equation (36) where the sign of $\frac{\partial P}{\partial \tau}$ is the opposite of the sign of $\frac{\partial \Delta_t}{\partial \tau}$. As the price index at home falls, firms only servicing the domestic market see their revenues reduced and thus the least productive ones exit the industry. As a result, the exit productivity cutoff increases, as can be seen from equation (33) where the sign of $\frac{\partial \varphi_t^*}{\partial \tau}$ is the same as the sign of $\frac{\partial \Delta_t}{\partial \tau}$. Thus, exactly as in Melitz (2003) a reduction in variable export costs induces the exit of the least productive firms in the industry.

Note that although the share of firms entering the export market and the share of firms adopting technology *h* increases, meaning that $\frac{\varphi_x(\varphi^*)}{\varphi^*}$ and $\frac{\varphi_h(\varphi^*)}{\varphi^*}$ fall, it could be in principle possible that φ_x and φ_h increase as the exit cutoff is increasing. Indeed, the

reduction in τ has two effects on exporting revenues: first a direct positive effect as exporters reduce their price and sales react more than proportionally ($\sigma > 1$); second, an indirect negative effect as the price index at foreign falls because of entry of more productive firms and technology upgrading at foreign, entry of new exporters from home, technology upgrading of home exporters and the reduction of the prices charged by all home exporters. In Appendix 1 I show that the direct effect dominates thus exporting revenues increase and $\frac{\partial \varphi_x}{\partial \tau} > 0$.

With respect to the benefit of technology upgrading, which is proportional to total revenues, the reduction in τ then increases exporting revenues but reduces domestic revenues as the home price index falls. *P* falls because there is entry of foreign firms, a higher share of home firms use technology *h* and the least productive home firms exit. I also show in the appendix that the first effect dominates so that $\frac{\partial \varphi_h}{\partial \tau} > 0$ as long as not all firms export ($\tau^{\sigma-1} f_x > f$). Then, bilateral trade liberalization has an effect on technology adoption only if not all firms export. The intuition for this result is that if all firms export, then the marginal firm would be an exporter and thus φ^* would be defined by:

$$\pi_l^x(\varphi^*) = 0 \Leftrightarrow \left(1+\tau^{1-\sigma}\right)\frac{1}{\sigma}E\left(P\rho\right)^{\sigma-1}\left(\varphi^*\right)^{\sigma-1} - f - f_x = 0 \tag{37}$$

and thus the technology adoption cutoff would be

$$\varphi^h = \varphi^*\left(\frac{\eta-1}{\gamma^{\sigma-1}-1}\right)^{\frac{1}{\sigma-1}}$$

and expected profits would be

$$\bar{\pi}_t = \left(\frac{\sigma-1}{k-(\sigma-1)}\right)\left[f + f_x + \left(\left(\frac{\eta-1}{\gamma^{\sigma-1}-1}\right)^{\frac{1}{\sigma-1}}\right)^{-k}\left(f_h - f\right)\right]$$

Then, a reduction in τ would not affect expected profits, and thus the exit cutoff would also remain unaffected. As a result, as can be seen in eq. (37) the price level would fall in such a way to offset the increase in revenues produced by the fall in τ , thus the benefit of technology adoption (that is proportional to revenues) would not increase. The

reason why this does not happen when not all firms export is that the reduction in τ produces an advantage for the more productive firms relative to the marginal firm, thus its positive impact on revenues is not offset by free entry.

The results that $\frac{\partial \varphi_x}{\partial \tau} > 0$ and $\frac{\partial \varphi_h}{\partial \tau} > 0$ are important to establish for empirical work as only if these cutoffs fall a reduction in variable export costs induces entry in the export market and technology upgrading by firms that did not export or adopt technology *h* before trade liberalization, which are the testable implications of the model I take to the data in the following section.

3. Context and Data

3.1 Trade Liberalization

Argentina started reducing import tariffs with respect to the rest of the world before MERCOSUR was launched. Between October 1988 and October 1991 there were 11 major revisions on trade policy, often related to changes in macroeconomic policy aimed at controlling hyperinflation. By October 1991, the average nominal tariff was 12%, ranging from 0% for capital goods not produced in the country to 22% for consumption goods. Almost all import licenses were eliminated, with the exception of the automobile industry.

MERCOSUR was established by Argentina, Brazil, Paraguay and Uruguay in March 1991. The agreement included the progressive elimination of tariff and non tariff restrictions to trade, and the adoption of a common tariff with third countries. There was a transition phase between 1991 and 1994 that consisted of progressive tariff reductions aimed to achieve free trade within the region by the end of 1994. The Customs Union was established in 1995 with the adoption of a Common External Tariff (CET), with an average level of 11%. Tariffs varied between 0 and 20% across industries. Inputs and materials had the lowest tariffs, followed by semi-finished industrial goods, and final goods. There were exceptions to internal free trade for a limited number of products, special regimes for sugar and automobiles and some products faced tariff rates different from the CET. As a result of the agreement, in 1996 the import weighted average intra-

MERCOSUR tariff was 0.86% for Argentina and 0.02% for Brazil, while the extra-zone average tariff was 13.17% and 15.44% respectively.

The panel I analyze covers the period 1992-1996, that is coincident with the multilateral trade liberalization, but posterior to Argentina's unilateral trade liberalization. As a result, Argentinean import tariffs had already been reduced in the period under study. In fact, between 1992 and 1996 average import tariffs increased slightly (1.28%). The modifications on import tariffs during this period are partly related to the reduction in tariffs within MERCOSUR, and the convergence to the CET, that partly reflected the structure of protection in Brazil. Figure 1.a reports the frequency of the change in import tariffs from Argentina with the rest of the world for 4-digit SIC industries, where within each 4-digit-industry tariffs for different tariff lines (HS 1988) and origins are weighted by imports.[7] The reduction in import tariffs from Brazil is reported in Figure 1.b. The average reduction was only 12 percentage points, as import tariffs in Argentina were already low before MERCOSUR was launched. In fact, imports from Brazil grew exactly at the same rate as imports from the rest of the world during this period (60%).

MERCOSUR had a much bigger impact on Argentinean exports. Between 1992 and 1996, exports to Brazil quadrupled, while exports to the rest of the world only increased 60%. As a result, growth in exports to Brazil explains 50% of the growth in exports during this period. This might be related to the deep reduction in Brazilian tariffs for imports from Argentina, which fell on average 24 percentage points, with a maximum fall of 63 pp. Figure 2 reports the frequency of the variation in Brazilian import tariffs for 4-digit SIC industries. This variation reflects import tariffs in 1992, as all tariffs were zero in 1995, except for the automobile sector.

3.2 Firm-Level Data

The data I analyze comes from the Survey on Technological Behavior of Industrial Argentinean Firms [Encuesta sobre la Conducta Tecnologica de las Empresas Industriales Argentinas (ETIA)] conducted by the National Institute of Census and Statistics in Argentina (INDEC). The survey covers the period 1992-1996 and was conducted in 1997

[7] The source of tariff data is TRAINS.

over a representative sample of 1,639 industrial firms. The sample was based on 1993 census data and covers 40% of total industrial sales and employment in 1996.

As the survey was conducted in 1997, it does not contain information on firms that were active in 1992 and exited afterwards. I focus my analysis on a balanced panel of 1,388 firms present both in 1992 and 1996 for which there is information on sales, employment and belong to 4-digit-SIC industries with information on Brazil's tariffs.

The survey contains information on several dimensions of spending on technology upgrading. Firms upgrade technology by performing various innovation activities like internal R&D, paying for technology transfers and buying capital goods that embody new technologies; and with different purposes like changing production processes, products, organizational forms or commercialization.

I constructed a measure of spending on technology (ST) that includes these different dimensions: spending on computers and software; payments for technology transfers and patents; and spending on equipment, materials and labor related to innovation activities performed within the firm.[8]

The survey contains information on ST for all years in the period 1992-1996, while information on all the rest of the variables (sales, exports, imports, employment by education, investment) is only available for the years 1992 and 1996.

3.3 Sector-Level Data

In the empirical section I use controls for 4-digit-SIC industry characteristics that might be correlated with changes in tariffs. First, average capital and skill intensity in the industry in the U.S. in the 1980's obtained from the NBER productivity database. The measure of capital intensity is capital (real equipment plus real structures) per worker, although other measures like only real equipment capital per worker, or capital over value added provide similar results. The measure of skill intensity is the ratio of non production to production workers in the industry, although the relative wage share of non production workers was also used providing similar results. Finally, I use the elasticity of substitution in the industry as estimated by Broda and Weinstein (2006).

[8] Like R&D, adaptation of new products or production processes, technical assistance for production, engineering and industrial design, organization and commercialization

4. Empirics

In this section I test the predictions of the theoretical model developed in section 2. First, I check whether observed characteristics of continuing exporters (firms that exported both in 1992 and 1996) and new exporters (firms that did not export in 1992 but did export in 1996) relative to non-exporters in the same 4-digit-SIC industry are consistent with the sorting pattern predicted by the model. Second, I test whether firms are more likely to enter the export market and upgrade technology in industries where Brazil's tariffs fell more.

4.1 Within-industry patterns in the data

In the model, underlying productivity differences produce a sorting of firms into three groups: the low productivity firms only serve the domestic market and use the old technology, the medium productivity firms still use the old technology but also export, and the most productive firms both export and use the new technology. In this setting a reduction in variable trade costs will increase exporting revenues inducing firms in the middle-range of the productivity distribution to enter the export market and upgrade technology. Figure 3 illustrates the effects of trade liberalization for firms in each part of the productivity distribution. Note that firms with initial productivity $\varphi > \varphi_h^0$ were already exporting and high tech before liberalization, firms in the range $\varphi_x^0 < \varphi < \varphi_h^0$ were already exporting before Brazil's tariffs drop, but will find it profitable to adopt the new technology only afterwards, as their export revenues increase. Thus, under this ordering of cutoffs, we expect that, on average, continuing exporters increase their spending in technology. Next, firms in the range $\varphi_h^1 < \varphi < \varphi_x^0$ will enter the export market and adopt the new technology, while firms in the range $\varphi_x^1 < \varphi < \varphi_H^1$ enter the export market but keep the old technology. Then, we would expect that, on average, new exporters increase spending in technology.

Figure 3: Effect of falling variable export costs

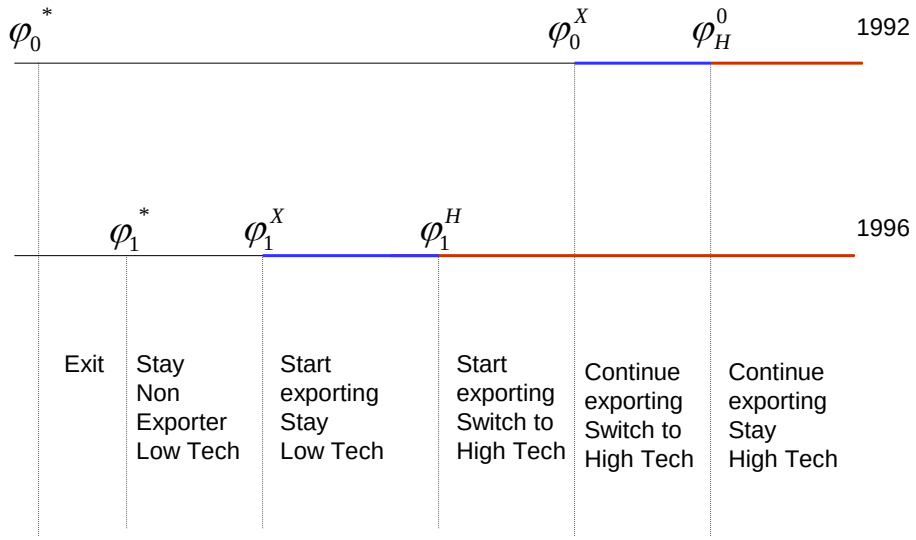

Table 1 reports differences between exporters and non exporters within the same 4-digit-SIC industry before liberalization: firms that were already exporting in 1992 are on average 2.8 times bigger in terms of sales than never exporters, while firms that would enter the export market after 1992 (new exporters) are in between (2 times bigger than never exporters). In addition, firms that export in 1992 have a 0.37 log points higher level of spending in technology per worker and are 6.5 times more skill intensive than firms that would never export, while new exporters are not significantly more technology or skill intensive than never exporters in 1992. In contrast, after liberalization these new exporters become more skill and technology-intensive than firms that do not export, increasing their spending in technology per worker 0.34 log points faster. Interestingly, firms that were already exporting in 1992 also increase spending in technology 0.27 log points faster than never exporters.

The patterns in the data described above show that there is a coincidence between entry in the export market and technology upgrading, but can't establish whether it is expanded export opportunities that cause technology adoption or viceversa, or whether both are caused by a third factor. As the results described above are based on comparisons of exporters and non exporters within industries, they are robust to

macroeconomic shocks that affect all firms equally (an example could be exchange rate appreciation) or to shocks that affect all firms within an industry (an example could be fast technological change in a particular industry). Still, the fact that within each sector exporters and new exporters are upgrading technology faster than other firms could reflect other shocks that affect middle and high productivity firms differentially. One example could be capital account liberalization that could facilitate access to credit to finance technology upgrading and entry in foreign markets for middle and big firms but not to small firms. Then, the next step in the empirical analysis attempts to establish causality between exporting and technology adoption, by linking these outcomes directly to the reduction in Brazil's tariffs for imports from Argentina.

4.2 The Impact of the reduction in Brazil's tariffs

Empirical identification of the effect of the fall in variable export costs on entry in the export market and technology upgrading by Argentinean firms will be based on variation in the change in Brazilian import tariffs across 4-digit-SIC Industries.

As the tariff reductions were programmed in 1991, and reach a level of zero for all industries[9] in 1995 the source of variation is the initial tariff levels in Brazil, thus the change in tariffs can't be driven by political pressures arising from the effects of liberalization in Brazil or Argentina, or the response to shocks to industry performance during this period. I use the 1992 tariffs of Brazil for imports from Argentina that were very similar to tariffs for imports from the rest of the world. As in 1991 Argentina's share on Brazil's imports was only 7.7%, and rose only to 11.2% in 1995 when all tariffs were eliminated, it is unlikely that Brazil's trade policy was targeted to industry characteristics particular to Argentina, in the sense that they were high in industries where Argentina had a comparative advantage. Still, Brazil's tariff structure is correlated with certain industry characteristics which could be an important source of bias. I address this problem in two ways: first, I include 2-digit-SIC sector trends that would account for unobserved industry characteristics at broad sector levels that could be correlated with Brazil's tariffs; second, I include in the regressions controls for some industry characteristics at the 4-digit-SIC level as the elasticity of demand, capital and skill intensity.

[9] Except for the automobile and sugar industries. All the results presented in this section have been replicated for the sample of firms excluding these sectors.

An additional issue concerning the use of Brazil's tariffs to measure the effect of expanded export opportunities on entry in the export market and technology upgrading is that they might be correlated with changes in Argentina's tariffs during this period, as long as the structure of protection was similar between the two countries in 1992. To address this concern I control for the change in Argentina's tariffs with respect to the world in the period 1992-1996, and alternatively for the change in Argentina's tariffs with respect to Brazil. An important point to note is that Argentina's tariffs with the rest of the world were very similar to tariffs with respect to Brazil in 1992 (the correlation is 0.92), thus it is hard to distinguish the effect of the reduction of tariffs with respect to Brazil from changes of tariffs with respect to the rest of the world. In effect, as discussed earlier, Argentina had already gone through a process of unilateral trade liberalization before 1992, thus its tariffs were already low in 1992 and there was no change in the share of Argentinean imports from MERCOSUR in the period 1992-1996 (stayed at 24%).

I will first present the estimation of the effect tariff changes on entry in the export market and later the estimation for technology upgrading.

Entry in the export market

I estimate a linearized version of the entry in the export market choice described by equation (34):

$$EXP_{ijt} = \begin{Bmatrix} 1 & if\ \beta_{\mathrm{T}}\tau_{jt} + I_{st} + k_{ij} + \varepsilon_{ijt} > 0 \\ 0 & otherwise \end{Bmatrix} \qquad \text{(I)}$$

where j indexes 4-digit-SIC industries; s indexes 2-digit-SIC industries; t indexes time, that is the years 1992 and 1996; i indexes firms; EXP_{ijt} is a dummy variable that takes the value of 1 if the firm exported in year t; τ_{jt} are Brazil's tariffs that vary at the 4-digit-SIC industry and across time; k_{ij} are plant fixed effects that capture unobserved constant plant heterogeneity (φ) and constant sector characteristics that affect the sector exporting cutoffs in the model (σ, k, f_x, f, η, γ) and also some other sector characteristics that although not included in the model might affect the exporting

cutoffs (like factor intensity)[10]; I_{st} are 2-digit-SIC industry dummies that capture variation across time in sector characteristics.

Due to the nonlinearity of the probability function in the probit model, equation (I) with plant fixed effects can't be consistently estimated by probit (incidental parameters problem), then I will estimate it using the linear probability model:

$$EXP_{ijt} = \beta_\tau \tau_{jt} + I_{st} + k_{ij} + \varepsilon_{ijt} \qquad \text{(II)}$$

In this case differencing eliminates the constant plant and sector heterogeneity:

$$\Delta EXP_{ij} = \beta_\tau \, \Delta \tau_j + \Delta I_s + \Delta \varepsilon_{ij} \qquad \text{(III)}$$

Estimation of equation 3 by OLS is reported in the first column of Table 2, where the reported standard errors are clustered at the 4-digit-SIC industry level. The coefficient in the change in Brazil's tariffs (β_τ) is negative (-0.424) and significant (t =-5.8), meaning that the average drop in Brazil's tariffs (24 percentage points) increases the probability of entry in the export market by 10 percentage points.

There are several potential problems with the estimation of equation (III). First, it is a linearized version of a nonlinear probability function, then if the true function is nonlinear first differencing does not eliminate constant unobserved plant and sector characteristics, and these might be correlated with tariffs. One way to check if the linear specification in equation (II) is correct is to include in the regression initial firm and industry characteristics that are expected to be proxies for constant firm and industry heterogeneity:

$$\Delta EXP_{ij} = \beta_\tau \, \Delta \tau_j + \beta_z z_{ij1992} + \beta_c c_j + \Delta I_s + \Delta \varepsilon_{ij} \qquad \text{(IV)}$$

Where z_{ij1992} are firm characteristics in the initial year (1992) like size measured by the number of workers, productivity measured by sales per worker and skill intensity; and c_j are 4-digit-SIC industry characteristics like the elasticity of demand, skill and capital intensity in the U.S.

[10] Bernard, Redding and Schott (2004) develop a 2 factor, 2 sector and 2 country model of trade with heterogeneous firms and show that the cutoff for entry in the export market is closer to the exit cutoff in comparative advantage industries.

Estimation of equation (IV) is reported in columns (2) to (6) of Table 2, and although some of the firm and industry characteristics are highly significant, the coefficient on Brazil's tariffs is not significantly affected by their inclusion. I also control for the change in import tariffs in case these had some indirect effect on exporting, but these are not significant. The coefficients in the regressions including all controls (columns 4 and 6) are -0.545 (t=-6.26) and -0.439 (t=-3.5) and imply that the average drop in Brazil's tariffs (24 percentage points) increases the probability of entry in the Brazil's market by 13 to10 percentage points.

It is interesting to note that the results reported in Table 2 imply that bigger and more productive firms are more likely to enter the export market, as predicted by the model. Skill intensity at the firm-level has no effect on entry in the export market. Measures for the change in Argentina's tariffs with the world are not significant (Columns 3 and 4), and the change in Argentina's tariffs with respect to Brazil is also not significant once controls for sector characteristics are included (Columns 5 and 6).

Of the sector characteristics only the elasticity of demand has a significant positive effect on entry, and skill-intensity has a significant negative effect that becomes insignificant when the change in Argentina's tariffs with respect to Brazil is included in the regression, as Argentina was protecting unskilled-labor intensive sectors these variables are highly correlated and become insignificant when both are included in the regression. I think it is likely that the relevant variable in this setting is skill intensity because Argentina's tariffs were already low before MERCOSUR, and as a result the share of MERCOSUR imports in total Argentinean imports did not increase between 1992 and 1996.

A second potential problem of the specification in equation (IV) is that if there are sunk exporting costs, current exporting status might depend on lagged exporting status,[11] which in turn is likely to be correlated with the initial level of Brazil's tariffs. As the panel I am analyzing only contains data for 1992 and 1996, it is not possible to include lagged export status in the specification in differences. One way to check that this is not creating a problem in the identification on the coefficient on Brazil's tariffs is to estimate

[11] Bernard and Jensen (2004) find evidence of the existence of sunk exporting costs in the U.S.

the equation restricted to firms that were not exporters in 1992. In this case, as the only possible outcome is entry, I will estimate both the linear probability model (LPM) and the Probit model:

$$EXP_{ij1996} = \begin{cases} 1 & if\ \beta_\tau\ \Delta\tau_j + \beta_z z_{ij1992} + \beta_c c_j + \Delta I_s + \nu_{ij} > 0 \\ 0 & otherwise \end{cases} \qquad \text{(V)}$$

Table 3 reports the estimation of equation (V) by the LPM. The coefficient on the change in Brazil's tariffs is very similar to the one estimated with the full sample and significant [-0.613 (t=-4.14) and -0.51 (t=-3.07) in columns 4 and 6 where all controls are included], implying that the average reduction in tariffs increases the probability of entering the export market by 15 to 12 percentage points.

Table 4 reports estimation of equation (V) by the Probit model. The coefficient on the change in Brazil's tariffs is similar to the one estimated with the LPM and significant (-0.716 (t=-4) and -0.582 (t=-3.05) in columns 4 and 6 where all controls are included), implying that the average reduction in tariffs increases the probability of entering the export market by 17 to 14 percentage points.

It is interesting to note that the initial size control, that is included as an indicator of the permanent component of firm productivity, enters in a quadratic form in the estimation with the full sample and only as a linear term in the estimation restricted to non exporters in 1992.[12] In the first case, the effect of size on entry peaks 0.38 standard deviations above the mean of the size distribution, after which it is negative. This is consistent with the model's prediction that firms in the middle range should be entering when tariffs fall, as the most productive ones would already be exporters. In the second case, as the sample is restricted to non exporters, the effect of size is predicted to be monotonic: more productive firms are always more likely to enter.

A potential problem in the estimation of equation (V) is sample selection. The model predicts that in sectors where tariffs are higher the exporting cutoff will be higher, thus it is likely that in sectors with high initial tariffs non exporters will be more productive than in sectors with low initial tariffs, creating a positive correlation between tariffs in 1992

[12] Alternative polynomials in size were included in each specification, and the reported ones are the only ones that were significant.

and unobserved productivity, thus biasing downwards the coefficient on the change in tariffs. A simple way to asses whether this is a problem is to look at the correlation of firm characteristics that are correlated with unobserved productivity like size and sales per worker in the sub sample of non exporters in 1992, and both are very low (-0.033 and 0.013). In addition, when these firm characteristics are included in the regressions the coefficient does not change in the case of the LPM (Column 2 of table 3) and becomes still lower in the Probit model (Column 2 of table 4), thus sample selection does not seem to play an important role.

Technology adoption decision

The technology adoption decision described in the model (equation 35) is binary, but the variable I observe in the data is spending in technology, then i will try to identify changes in technology through changes in spending in technology, both in absolute levels and per worker. According to equation (35), a firm will be more likely to adopt technology H the lower is the threshold φ_H in its sector, and the higher is its own productivity (φ), then the level of spending in technology can be described by:

$$\log ST_{ijt} = \alpha_{\tau^x}\tau_{x\,jt} + \alpha_{\tau^m}\tau_{m\,jt} + I_{st} + k_{ij} + \varepsilon_{ijt} \qquad \text{(VI)}$$

where τ_m denotes import tariffs, as adoption of new technologies depends on the size of the export market and also the size of the domestic market. In differences:

$$\Delta \log ST_{ij} = \alpha_{\tau^x}\Delta\tau_{x\,j} + \alpha_{\tau^m}\Delta\tau_{m\,j} + \Delta I_s + \Delta\varepsilon_{ij} \qquad \text{(VII)}$$

Estimation of equation VII by OLS is reported in Table 5. The coefficient on the change in export tariffs is negative and significant in all specifications. The size of the coefficient (-0.867 (t=-2.36) -1.195 (t=-2.13) in columns 4 and 6 where all controls are included) implies that the average drop in Brazil's tariffs (24 percentage points) induces an increase in technology spending of 0.20 to 0.28 log points. In this case all firm-level variables are significant but their inclusion has a very small effect on the coefficient on Brazil's tariffs. The change in import tariffs is not significant.

Next, I estimate equation (VII) for two sub-samples of firms, the ones that were not exporting in 1992 and the ones that were exporting, as the model predicts that both

groups will upgrade technology if the ordering of cutoffs for entry in the export market (φ_x) and for adopting the new technology (φ_h) before (t=0) and after liberalization (t=1) is $\varphi_x^1 < \varphi_H^1 < \varphi_x^0 < \varphi_H^0$. Reductions in Brazil's tariffs will induce entry in the export market and adoption of the new technology for firms that with initial productivity (φk) in the range $\varphi_x^1 < \varphi_H^1 < \varphi < \varphi_x^0 < \varphi_H^0$. Then, within the group of firms that were not exporting in 1992, bigger tariff reductions imply bigger drops in both thresholds and thus a higher likelihood that firms will find themselves in the range where they enter the export market and upgrade technology. Table 6 reports the estimation of equation (V) for the sub-sample of firms that were not exporting in 1992. The coefficient β_{Tx} is significant in all specifications and similar to the one estimated for the full sample. For the other half of the sample, firms that were exporting in 1992, the reduction in tariffs would induce technology upgrading if they are on the range $\varphi_x^1 < \varphi_H^1 < \varphi_x^0 < \varphi < \varphi_H^0$ which again will be more likely the bigger the drop in φ_H, thus the larger the reduction in Brazil's tariffs. Table 7 reports the estimation for the sub sample of firms that exported in 1992, the coefficient is similar to the one estimated for the full sample, and significant in all specifications except in column (4) where all sector-level controls are included and the change in Argentinean tariffs with respect to the world is included. The change in Argentinean tariffs is correlated with initial Brazilian tariffs (correlation is 0.15), as between 1992 and 1995 the external tariffs of Argentina converged to the common external tariff of MERCOSUR, that was partly based on Brazil's external tariff structure, thus it is possible that the smaller sample size of the group of exporters makes it difficult to separately identify their effects when all sector-level controls are included, as when only firm level controls and the change in Argentina's tariffs is included the coefficient on Brazil's tariffs is significant.

The result that firms that were already exporting in 1992 upgrade technology is consistent with technology upgrading being driven by the increase in revenues, which results from the assumption that adoption of the new technology requires payment of a fixed cost. If technology upgrading was driven by the mere act of exporting, Brazil's tariffs would impact technology spending only through their induced entry in the export

market, and there would be no effect on the sample restricted to firms that exported in 1992.

A further question is if the reduction in Brazil's tariffs also increases the technology intensity of production, in the sense of increasing the ratio of spending in technology to labor. This is stronger evidence that firms are actually changing the technology they are using, instead of just expanding production by increasing the use of all factors proportionally. Table 8 reports estimates of equation VII, replacing the growth in spending in technology by the growth in spending in technology per worker as the dependent variable. The estimates of β_{Tx} are very similar to the ones reported in table 5. Finally, tables 9 and 10 report the estimation of the same equation restricted to non exporters and exporters in 1992, providing results similar to tables 6 and 7.

Domestic Sales

As an additional robustness check that the drop in Brazil's tariffs is acting through increased export revenues and is not correlated with other shocks that might affect industries at the 4-digit-SIC level of desegregation and would not be captured by the 2-digit-SIC-industry dummies, I estimated equation VII with the change in domestic sales as a dependent variable. The results are reported in table 11. Domestic sales are not significantly correlated with Brazil's tariffs, except in the two specifications that include all controls (columns 4 and 6) where the coefficient is significant at 10% confidence level. Still, as the coefficient is always positive it would actually bias the effect of Brazil's tariffs on technology towards zero, as the fall in Brazil's tariffs is slightly correlated with negative shocks in domestic sales. Interestingly, the model predicts that in sectors where Brazil's tariffs fall more domestic sales would be reduced for all firms as the exit productivity cutoff increases, so competitors in the industry become more productive. In addition, for firms that did not upgrade technology domestic sales would also fall due to the technology upgrading by rivals, thus a positive correlation of domestic sales with the change in Brazil's tariffs is not inconsistent with the model. Still, even in the case where this correlation is reflecting other shocks to domestic sales it is weak and can't be behind the 1% significance found in the equivalent regressions for entry in the export market ad technology upgrading.

5. Concluding Remarks

The evidence reported in this paper suggests that expanded export opportunities can have a positive effect on firm performance. The evidence is consistent with falling variable export costs increasing revenues for exporters and making adoption of new technologies profitable for more firms. The finding that falling variable export costs induce firms to take actions that can increase their productivity suggests that the cross-sectional differences between exporters and non exporters are not completely explained by selection of the most productive firms into the export market, but are partly induced by participation in export markets. Then, trade policies oriented to facilitate access to foreign markets, like multilateral trade liberalizations, can have a positive effect on firm-level performance.

References

Bernard, Andrew B. and J. Bradford Jensen, 1999, "Exceptional Exporter Performance: Cause, Effect or Both?" Journal of International Economics 47 1-25.

Bernard, Andrew B. and J. Bradford Jensen, 2004, "Why Some Firms Export" The Review of Economics and Statistics 86 (2) 561-569.

Bernard Andrew, Stephen Redding and Peter Schott, 2007 "Comparative Advantage and Heterogeneous Firms," Review of Economic Studies, 74, 31-66.

Bustos, Paula, 2005, "The Impact of Trade on Technology and Skill Upgrading: Evidence from Argentina" Unpub. Paper UPF.

Broda, Christian and David Weinstein, 2006, "Globalization and the Gains from Variety," Quarterly Journal of Economics 121 (2) 541-585.

Melitz, Marc, 2003, "The Impact of Trade on Aggregate Industry Productivity and Intra-Industry Reallocations," Econometrica 71 (6) 1695-1725.

Clerides, Sofronis K., Saul Lach, and James R. Tybout, 1998, "Is Learning by Exporting Important? Micro-dynamic Evidence from Colombia, Mexico and Morocco," Quarterly Journal of Economics 133 (3) 903-947.

Trefler, D., 2004, "The Long and The Short of the Canada-U.S. Free Trade Agreement, " American Economic Review 94 (4) 870-895.

Verhoogen, E., 2007, "Trade, Quality Upgrading and Wage Inequality in the Mexican Manufacturing Sector:," Unpub. Paper Columbia University.

Yeaple, S.R., 2005, "A Simple Model of Firm Heterogeneity, International Trade and Wages," Journal of International Economics 65 1-20.

Theory Appendix

1. Proof that $\frac{\partial \varphi_x}{\partial \tau} > 0$:

$$\varphi^x = \left[\frac{f}{\delta f_e} \left(\frac{\sigma - 1}{k - (\sigma - 1)} \right) \right]^{\frac{1}{k}} \left(\frac{f_x}{f} \right)^{\frac{1}{\sigma - 1}} \Delta_t^{\frac{1}{k}} \tau$$

$$\frac{\partial \varphi^x}{\partial \tau} = \left[\frac{f}{\delta f_e} \left(\frac{\sigma - 1}{k - (\sigma - 1)} \right) \right]^{\frac{1}{k}} \left(\frac{f_x}{f} \right)^{\frac{1}{\sigma - 1}} \frac{\partial \left(\Delta_t^{\frac{1}{k}} \tau \right)}{\partial \tau}$$

Then, as $\sigma > 1$ and $k > (\sigma - 1)$, it is sufficient to consider the sign of the last term.

$$\Delta_t^{\frac{1}{k}} \tau = \left\{ \tau^k + \left(\left(\frac{f_x}{f} \right)^{\frac{1}{\sigma - 1}} \right)^{-k} \frac{f_x}{f} + \tau^k \left(1 + \tau^{1-\sigma} \right)^{\frac{k}{\sigma - 1}} \left[\left(\frac{\eta - 1}{\left(\gamma^{\sigma - 1} - 1 \right)} \right)^{-\frac{k}{\sigma - 1}} (\eta - 1) \right] \right\}^{\frac{1}{k}}$$

Then, the last term is:

$$\frac{\partial \left(\Delta_t^{\frac{1}{k}} \tau \right)}{\partial \tau} = \frac{1}{k} \left(\Delta_t^{\frac{1}{k}} \tau \right)^{\frac{1}{k} - 1} \left\{ k \tau^{k-1} + A \left[\left(\frac{\eta - 1}{\left(\gamma^{\sigma - 1} - 1 \right)} \right)^{-\frac{k}{\sigma - 1}} (\eta - 1) \right] \right\} \tag{A.1}$$

where

$$A = k \tau^{k-1} \left(1 + \tau^{1-\sigma} \right)^{\frac{k}{\sigma - 1}} - \tau^k k \left(1 + \tau^{1-\sigma} \right)^{\frac{k}{\sigma - 1} - 1} \tau^{-\sigma} > 0$$

because:

$$A > 0 \Leftrightarrow$$

$$k \tau^{k-1} \left(1 + \tau^{1-\sigma} \right)^{\frac{k}{\sigma - 1}} > \tau^k k \left(1 + \tau^{1-\sigma} \right)^{\frac{k}{\sigma - 1} - 1} \tau^{-\sigma} \Leftrightarrow$$

$$1 > \frac{\tau^{1-\sigma}}{\left(1 + \tau^{1-\sigma} \right)}$$

Then, as all terms in equation (A.1) are positive, $\frac{\partial \left(\Delta_t^{\frac{1}{k}} \tau \right)}{\partial \tau} > 0$, and then $\frac{\partial \varphi_x}{\partial \tau} > 0$.

2. Proof that $\frac{\partial \varphi_h}{\partial \tau} > 0$:

First, note that as $k > 0$, $sign\frac{\partial \varphi_h}{\partial \tau} = sign\frac{\partial\left[(\varphi_h)^k\right]}{\partial \tau}$

$$(\varphi_h)^k = \left[\frac{f}{\delta f_e}\left(\frac{\sigma-1}{k-(\sigma-1)}\right)\right]\left(\frac{\eta-1}{\gamma^{\sigma-1}-1}\right)^{\frac{k}{\sigma-1}}\Delta_t\left(1+\tau^{1-\sigma}\right)^{-\frac{k}{\sigma-1}}$$

$$\frac{\partial\left[(\varphi_h)^k\right]}{\partial \tau} = \left[\frac{f}{\delta f_e}\left(\frac{\sigma-1}{k-(\sigma-1)}\right)\right]\left(\frac{\eta-1}{\gamma^{\sigma-1}-1}\right)^{\frac{k}{\sigma-1}}\frac{\partial\left[\Delta_t\left(1+\tau^{1-\sigma}\right)^{-\frac{k}{\sigma-1}}\right]}{\partial \tau}$$

Then, it is sufficient to consider the sign of the derivative of the last term w.r.t. τ , where the last term is:

$$\Delta_t\left(1+\tau^{1-\sigma}\right)^{-\frac{k}{\sigma-1}} = \left\{\left(1+\tau^{1-\sigma}\right)^{-\frac{k}{\sigma-1}} + \left(1+\tau^{1-\sigma}\right)^{-\frac{k}{\sigma-1}}\tau^{-k}\frac{f_x}{f}^{\frac{\sigma-1-k}{\sigma-1}} + \left[\left(\frac{\eta-1}{\left(\gamma^{\sigma-1}-1\right)}\right)^{-\frac{k}{\sigma-1}}(\eta-1)\right]\right\}$$

Then,

$$\frac{\partial\left[\Delta_t\left(1+\tau^{1-\sigma}\right)^{-\frac{k}{\sigma-1}}\right]}{\partial \tau} = k\left(1+\tau^{1-\sigma}\right)^{-\frac{k}{\sigma-1}}\left[\left(1+\tau^{1-\sigma}\right)^{-1}\tau^{-\sigma}\left(1+\tau^{-k}\frac{f_x}{f}^{\frac{\sigma-1-k}{\sigma-1}}\right) - \tau^{-k-1}\frac{f_x}{f}^{\frac{\sigma-1-k}{\sigma-1}}\right]$$

As $k\left(1+\tau^{1-\sigma}\right)^{-\frac{k}{\sigma-1}} > 0$, then the sign of $\frac{\partial\left[\Delta_t\left(1+\tau^{1-\sigma}\right)^{-\frac{k}{\sigma-1}}\right]}{\partial \tau}$ is the same as the sign of the last term: which i show below is > 0 as long as $\tau^{\sigma-1}f_x > f$ which will be the case if trade costs are such that not all firms export:

$$\left(1+\tau^{1-\sigma}\right)^{-1}\tau^{-\sigma}\left(1+\tau^{-k}\frac{f_x}{f}^{\frac{\sigma-1-k}{\sigma-1}}\right) - \tau^{-k-1}\frac{f_x}{f}^{\frac{\sigma-1-k}{\sigma-1}} > 0 \Leftrightarrow$$

$$1+\tau^{-k}\frac{f_x}{f}^{\frac{\sigma-1-k}{\sigma-1}} > \left(1+\tau^{1-\sigma}\right)\tau^{\sigma-k-1}\frac{f_x}{f}^{\frac{\sigma-1-k}{\sigma-1}} \Leftrightarrow$$

$$1+\tau^{-k}\frac{f_x}{f}^{\frac{\sigma-1-k}{\sigma-1}} > \tau^{\sigma-k-1}\frac{f_x}{f}^{\frac{\sigma-1-k}{\sigma-1}} + \tau^{-k}\frac{f_x}{f}^{\frac{\sigma-1-k}{\sigma-1}} \Leftrightarrow$$

$$1 > \frac{1}{\tau^{k-(\sigma-1)}}\frac{f}{f_x}^{\frac{k-(\sigma-1)}{\sigma-1}} \Leftrightarrow$$

$$\tau^{\sigma-1}f_x > f$$

Figures 1.a and 1.b Change in Argentina's Import Tariffs 1992-1996

1.a Average for all countries

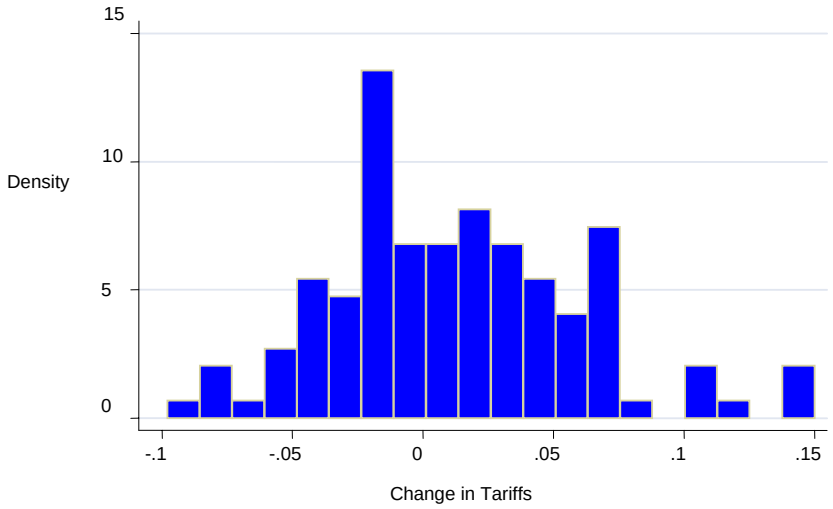

1.b Average for Brazil

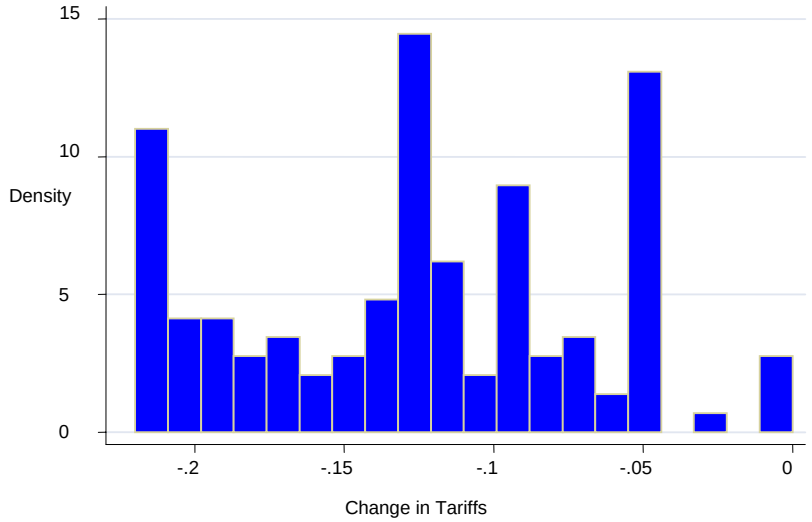

Figure 2 Change in Brazil's Tariffs for Imports from Argentina 1992-1996

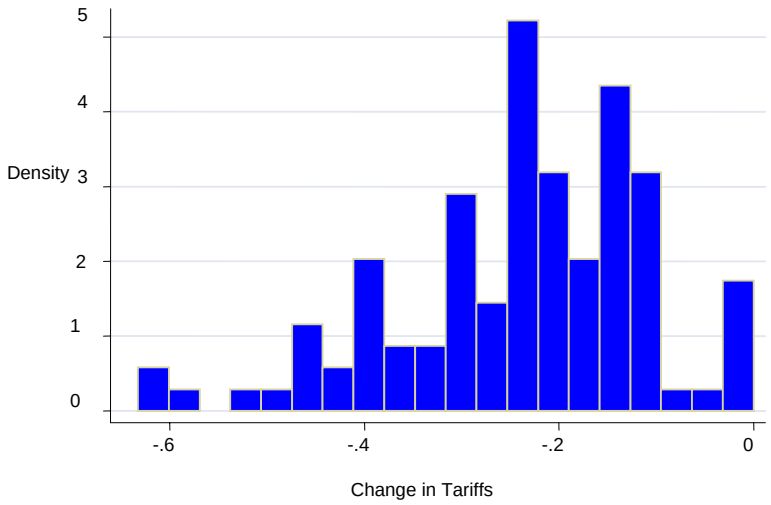

Table 1
Within Industry Patterns in the Data: Exporter Premia

Firm Characteristic	Continuing Exporters	New Exporters	Number of Firms
1992			
Sales	1.82	1.06	1388
	[0.086]***	[0.099]***	
Employment	1.52	0.86	1388
	[0.072]***	[0.084]***	
Spending in Technology per worker	0.37	0.21	899
	[0.145]**	[0.168]	
Skill Intensity	6.49	1.88	1388
	[1.099]***	[1.071]*	
Change 96-92			
Sales	0.18	0.25	1388
	[0.038]***	[0.046]***	
Employment	0.02	0.18	1388
	[0.025]	[0.033]***	
Spending in Technology per worker	0.27	0.34	899
	[0.103]***	[0.116]***	
Skill Intensity	1.22	1.27	1388
	[0.374]***	[0.461]***	

Robust Standard Errors in Brackets
* significant at 10%; ** significant at 5%; *** significant at 1%

Note: Exporter premia are estimated from a regression of the form:

$$\ln Y_{ij} = \alpha + \alpha_{NE} NE_{ij} + \alpha_{EE} EE_{ij} + \alpha_{EN} EN_{ij} + I_j + \varepsilon_{ij}$$

where i indexes firms, j indexes industries (four digit SIC classification); NE are new exporters, EE are continuing exporters, EN are firms that exported in 1992 but didn't in 1996 and the reference category relative to which differences are estimated is non exporters; Ij are industry dummies, and Y is the firm characteristic for which the premia are estimated.

	Observations
New Exporters	231
Continuing Exporters	557
Stopped Exporting	27
Non Exporters	573
Total	1388

Table 2
Entry in the Export Market
Full Sample

Dependent Variable: Change in exporting status 1996-1992

	1	2	3	4	5	6
Change in Brazil's tariffs	-0.424	-0.426	-0.420	-0.545	-0.291	-0.439
	[0.073]***	[0.070]***	[0.068]***	[0.087]***	[0.079]***	[0.124]***
Change in Argentina's tariffs wrt world			0.122	-0.008		
			[0.380]	[0.333]		
Change in Argentina's tariffs wrt Brazil					0.837	0.489
					[0.271]***	[0.311]
FIRM level controls						
Log (Employment$_{1992}$)		0.137	0.137	0.133	0.138	0.134
		[0.053]**	[0.053]**	[0.053]**	[0.053]**	[0.053]**
Log (Productivity$_{1992}$)		-0.013	-0.013	-0.013	-0.013	-0.013
		[0.005]**	[0.005]**	[0.005]**	[0.005]**	[0.005]**
Log (Productivity$_{1992}$)^2		0.038	0.038	0.039	0.037	0.038
		[0.014]***	[0.015]**	[0.014]***	[0.014]**	[0.014]***
Skill Intensity		-0.001	-0.001	-0.001	-0.001	-0.001
		[0.001]	[0.001]	[0.001]	[0.001]	[0.001]
INDUSTRY level controls						
Demand elasticity				0.017		0.016
				[0.006]***		[0.005]***
US Capital intensity				-0.028		-0.026
				[0.025]		[0.025]
US Skill intensity				-0.134		-0.100
				[0.056]**		[0.065]
II digit industry dummies	Yes	Yes	Yes	Yes	Yes	Yes
Observations	1388	1388	1388	1388	1388	1388
R-squared	0.03	0.04	0.04	0.05	0.04	0.05

Standard errors clustered at the IV-digit industry level
* significant at 10%; ** significant at 5%; *** significant at 1%

Table 3
Entry in the Export Market
Sample of non-exporters in 1992
Linear Probability Model

Dependent Variable: Entry in the export market in 1996

	1	2	3	4	5	6
Change in Brazil's tariffs	-0.360	-0.412	-0.423	-0.613	-0.269	-0.510
	[0.113]***	[0.125]***	[0.124]***	[0.148]***	[0.130]**	[0.166]***
Change in Argentina's tariffs wrt world			-0.222	-0.289		
			[0.575]	[0.480]		
Change in Argentina's tariffs wrt Brazil					0.937	0.427
					[0.476]*	[0.456]
FIRM level controls						
Log (Employment$_{1992}$)		0.121	0.121	0.121	0.119	0.120
		[0.016]***	[0.016]***	[0.015]***	[0.016]***	[0.015]***
Log (Productivity$_{1992}$)		0.066	0.066	0.064	0.062	0.061
		[0.019]***	[0.019]***	[0.019]***	[0.018]***	[0.018]***
Skill Intensity		0.000	0.000	0.001	0.001	0.001
		[0.001]	[0.001]	[0.001]	[0.001]	[0.001]
INDUSTRY level controls						
Demand elasticity				0.011		0.010
				[0.011]		[0.012]
US Capital intensity				0.035		0.037
				[0.047]		[0.047]
US Skill intensity				-0.216		-0.187
				[0.081]***		[0.084]**
II digit industry dummies	Yes	Yes	Yes	Yes	Yes	Yes
Observations	805	805	805	805	805	805
R-squared	0.04	0.15	0.15	0.17	0.16	0.17

Standard errors clustered at the IV-digit industry level
* significant at 10%; ** significant at 5%; *** significant at 1%

Table 4
Entry in the Export Market
Sample of non-exporters in 1992
Probit Model

Dependent Variable: Entry in the export market in 1996

	1	2	3	4	5	6
Change in Brazil's tariffs	-0.369	-0.437	-0.457	-0.716	-0.274	-0.582
	[0.111]***	[0.140]***	[0.138]***	[0.179]***	[0.150]*	[0.191]***
Change in Argentina's tariffs wrt world			-0.412	-0.531		
			[0.646]	[0.571]		
Change in Argentina's tariffs wrt Brazil					1.116	0.560
					[0.644]*	[0.588]
FIRM level controls						
Log (Employment$_{1992}$)		0.130	0.130	0.130	0.127	0.128
		[0.019]***	[0.019]***	[0.019]***	[0.020]***	[0.019]***
Log (Productivity$_{1992}$)		0.083	0.085	0.081	0.078	0.077
		[0.022]***	[0.022]***	[0.023]***	[0.022]***	[0.022]***
Skill Intensity		0.000	0.000	0.001	0.001	0.001
		[0.001]	[0.001]	[0.001]	[0.001]	[0.001]
INDUSTRY level controls						
Demand elasticity				0.009		0.007
				[0.013]		[0.013]
US Capital intensity				0.045		0.048
				[0.051]		[0.052]
US Skill intensity				-0.273		-0.241
				[0.108]**		[0.106]**
II digit industry dummies	Yes	Yes	Yes	Yes	Yes	Yes
Observations	805	805	805	805	805	805
Observed P	.289441	.289441	.289441	.289441	.289441	.289441
Predicted P (at X bar)	.2823885	.2572645	.2568933	.2525254	.2559729	.2526902
Log-likelihood value	-467.0335	-417.06766	-416.85636	-410.88945	-414.91253	-410.78402
Pseudo R-squared	0.0357	0.1389	0.1393	0.1516	0.1433	0.1518

Standard errors clustered at the IV-digit industry level
* significant at 10%; ** significant at 5%; *** significant at 1%

Table 5
Technology Adoption
Full Sample

Dependent Variable: Change in Log (Spending in Technology) 1996-1992

	1	2	3	4	5	6
Change in Brazil's tariffs	-1.017	-1.029	-1.011	-0.867	-1.251	-1.195
	[0.344]***	[0.339]***	[0.318]***	[0.367]**	[0.406]***	[0.562]**
Change in Argentina's tariffs wrt world			0.353	0.345		
			[1.132]	[1.155]		
Change in Argentina's tariffs wrt Brazil					-1.400	-1.463
					[1.147]	[1.466]
FIRM level controls						
Log (Employment$_{1992}$)		0.090	0.090	0.089	0.093	0.093
		[0.032]***	[0.032]***	[0.032]***	[0.032]***	[0.032]***
Log (Productivity$_{1992}$)		0.607	0.608	0.582	0.617	0.585
		[0.287]**	[0.287]**	[0.277]**	[0.285]**	[0.274]**
Log (Productivity$_{1992}$)^2		-0.072	-0.073	-0.068	-0.073	-0.068
		[0.033]**	[0.033]**	[0.032]**	[0.033]**	[0.032]**
Skill Intensity		0.006	0.006	0.006	0.005	0.006
		[0.002]**	[0.002]**	[0.003]**	[0.002]**	[0.003]**
INDUSTRY level controls						
Demand elasticity				0.024		0.029
				[0.021]		[0.022]
US Capital intensity				-0.212		-0.215
				[0.079]***		[0.081]***
US Skill intensity				0.215		0.113
				[0.165]		[0.211]
II digit industry dummies	Yes	Yes	Yes	Yes	Yes	Yes
Observations	899	899	899	899	899	899
R-squared	0.03	0.05	0.05	0.05	0.05	0.05

Standard errors clustered at the IV-digit industry level
* significant at 10%; ** significant at 5%; *** significant at 1%

Table 6
Technology Adoption
Sample of non-exporters in 1992

Dependent Variable: Change in Log (Spending in Technology) 1996-1992

	1	2	3	4	5	6
Change in Brazil's tariffs	-0.981	-1.213	-1.254	-1.144	-1.375	-1.308
	[0.495]*	[0.496]**	[0.479]**	[0.524]**	[0.577]**	[0.736]*
Change in Argentina's tariffs wrt world			-0.570	-0.423		
			[1.499]	[1.551]		
Change in Argentina's tariffs wrt Brazil					-1.224	-1.098
					[1.349]	[1.775]
FIRM level controls						
Log (Employment$_{1992}$)		0.140	0.140	0.135	0.144	0.139
		[0.053]***	[0.053]***	[0.054]**	[0.053]***	[0.055]**
Log (Productivity$_{1992}$)		0.362	0.363	0.354	0.368	0.361
		[0.395]	[0.396]	[0.393]	[0.396]	[0.393]
Log (Productivity$_{1992}$)^2		-0.037	-0.037	-0.035	-0.037	-0.035
		[0.048]	[0.049]	[0.049]	[0.048]	[0.048]
Skill Intensity		0.010	0.010	0.009	0.009	0.009
		[0.003]***	[0.003]***	[0.004]***	[0.003]**	[0.004]**
INDUSTRY level controls						
Demand elasticity				0.014		0.018
				[0.042]		[0.044]
US Capital intensity				-0.084		-0.083
				[0.136]		[0.133]
US Skill intensity				0.164		0.098
				[0.207]		[0.255]
II digit industry dummies	Yes	Yes	Yes	Yes	Yes	Yes
Observations	421	421	421	421	421	421
R-squared	0.07	0.11	0.11	0.11	0.11	0.11

Standard errors clustered at the IV-digit industry level
* significant at 10%; ** significant at 5%; *** significant at 1%

Table 7
Technology Adoption
Sample of exporters in 1992

Dependent Variable: Change in Log (Spending in Technology) 1996-1992

	1	2	3	4	5	6
Change in Brazil's tariffs	-1.093	-1.020	-0.959	-0.821	-1.328	-1.447
	[0.381]***	[0.379]***	[0.390]**	[0.539]	[0.452]***	[0.722]**
Change in Argentina's tariffs wrt world			1.994	1.816		
			[1.687]	[1.763]		
Change in Argentina's tariffs wrt Brazil					-1.785	-2.331
					[1.671]	[1.992]
FIRM level controls						
Log (Employment$_{1992}$)		0.094	0.097	0.100	0.097	0.102
		[0.045]**	[0.044]**	[0.044]**	[0.045]**	[0.046]**
Log (Productivity$_{1992}$)		0.543	0.541	0.525	0.544	0.502
		[0.494]	[0.491]	[0.471]	[0.495]	[0.464]
Log (Productivity$_{1992}$)^2		-0.075	-0.076	-0.071	-0.076	-0.068
		[0.055]	[0.055]	[0.051]	[0.055]	[0.050]
Skill Intensity		0.002	0.002	0.003	0.002	0.002
		[0.003]	[0.003]	[0.003]	[0.003]	[0.003]
INDUSTRY level controls						
Demand elasticity				0.025		0.035
				[0.023]		[0.024]
US Capital intensity				-0.224		-0.240
				[0.108]**		[0.106]**
US Skill intensity				0.217		0.033
				[0.262]		[0.327]
II digit industry dummies	Yes	Yes	Yes	Yes	Yes	Yes
Observations	478	478	478	478	478	478
R-squared	0.05	0.07	0.07	0.08	0.07	0.08

Standard errors clustered at the IV-digit industry level
* significant at 10%; ** significant at 5%; *** significant at 1%

Table 8
Technology Intensity
Full Sample

Dependent Variable: Change in Log (Spending in Technology per worker) 1996-1992

	1	2	3	4	5	6
Change in Brazil's tariffs	-1.049	-1.025	-0.949	-0.782	-1.256	-1.162
	[0.330]***	[0.332]***	[0.311]***	[0.349]**	[0.402]***	[0.550]**
Change in Argentina's tariffs wrt world			1.520	1.576		
			[1.063]	[1.074]		
Change in Argentina's tariffs wrt Brazil					-1.459	-1.381
					[1.040]	[1.381]
FIRM level controls						
Log (Employment$_{1992}$)		0.190	0.192	0.191	0.194	0.193
		[0.031]***	[0.031]***	[0.031]***	[0.031]***	[0.031]***
Log (Productivity$_{1992}$)		0.555	0.558	0.550	0.566	0.551
		[0.226]**	[0.225]**	[0.221]**	[0.224]**	[0.220]**
Log (Productivity$_{1992}$)^2		-0.078	-0.079	-0.077	-0.079	-0.076
		[0.026]***	[0.026]***	[0.026]***	[0.026]***	[0.026]***
Skill Intensity		0.002	0.002	0.002	0.002	0.002
		[0.002]	[0.002]	[0.002]	[0.002]	[0.002]
INDUSTRY level controls						
Demand elasticity				0.012		0.020
				[0.024]		[0.025]
US Capital intensity				-0.133		-0.135
				[0.080]		[0.082]
US Skill intensity				0.231		0.126
				[0.160]		[0.212]
II digit industry dummies	Yes	Yes	Yes	Yes	Yes	Yes
Observations	899	899	899	899	899	899
R-squared	0.04	0.09	0.09	0.09	0.09	0.09

Standard errors clustered at the IV-digit industry level
* significant at 10%; ** significant at 5%; *** significant at 1%

Table 9
Technology Intensity
Sample of non-exporters in 1992

Dependent Variable: Change in Log (Spending in Technology per worker) 1996-1992

	1	2	3	4	5	6
Change in Brazil's tariffs	-0.910	-1.027	-0.913	-0.782	-1.279	-1.245
	[0.519]*	[0.485]**	[0.455]**	[0.500]	[0.560]**	[0.719]*
Change in Argentina's tariffs wrt world			1.602	1.707		
			[1.359]	[1.379]		
Change in Argentina's tariffs wrt Brazil					-1.906	-1.830
					[1.267]	[1.741]
FIRM level controls						
Log (Employment$_{1992}$)		0.258	0.258	0.254	0.264	0.262
		[0.053]***	[0.053]***	[0.055]***	[0.053]***	[0.055]***
Log (Productivity$_{1992}$)		0.389	0.387	0.396	0.398	0.415
		[0.326]	[0.324]	[0.325]	[0.326]	[0.328]
Log (Productivity$_{1992}$)^2		-0.048	-0.049	-0.049	-0.048	-0.050
		[0.041]	[0.040]	[0.041]	[0.040]	[0.041]
Skill Intensity		0.003	0.003	0.003	0.002	0.002
		[0.003]	[0.003]	[0.003]	[0.003]	[0.003]
INDUSTRY level controls						
Demand elasticity				0.008		0.016
				[0.041]		[0.043]
US Capital intensity				-0.015		0.004
				[0.137]		[0.136]
US Skill intensity				0.213		0.081
				[0.199]		[0.258]
II digit industry dummies	Yes	Yes	Yes	Yes	Yes	Yes
Observations	421	421	421	421	421	421
R-squared	0.08	0.14	0.15	0.15	0.15	0.15

Standard errors clustered at the IV-digit industry level
* significant at 10%; ** significant at 5%; *** significant at 1%

Table 10
Technology Intensity
Sample of exporters in 1992

Dependent Variable: Change in Log (Spending in Technology per worker) 1996-1992

	1	2	3	4	5	6
Change in Brazil's tariffs	-1.176	-1.074	-1.009	-0.851	-1.318	-1.301
	[0.350]***	[0.359]***	[0.373]***	[0.480]*	[0.431]***	[0.678]*
Change in Argentina's tariffs wrt world			2.119	2.118		
			[1.579]	[1.612]		
Change in Argentina's tariffs wrt Brazil					-1.410	-1.568
					[1.561]	[1.871]
FIRM level controls						
Log (Employment$_{1992}$)		0.174	0.177	0.178	0.176	0.178
		[0.046]***	[0.045]***	[0.045]***	[0.046]***	[0.047]***
Log (Productivity$_{1992}$)		0.271	0.269	0.266	0.272	0.251
		[0.435]	[0.433]	[0.419]	[0.434]	[0.415]
Log (Productivity$_{1992}$)^2		-0.059	-0.060	-0.058	-0.060	-0.055
		[0.048]	[0.047]	[0.045]	[0.047]	[0.045]
Skill Intensity		0.002	0.002	0.002	0.001	0.002
		[0.003]	[0.003]	[0.003]	[0.003]	[0.003]
INDUSTRY level controls						
Demand elasticity				0.008		0.018
				[0.025]		[0.026]
US Capital intensity				-0.152		-0.164
				[0.101]		[0.101]
US Skill intensity				0.222		0.093
				[0.241]		[0.311]
II digit industry dummies	Yes	Yes	Yes	Yes	Yes	Yes
Observations	478	478	478	478	478	478
R-squared	0.05	0.09	0.10	0.10	0.09	0.10

Standard errors clustered at the IV-digit industry level
* significant at 10%; ** significant at 5%; *** significant at 1%

Table 11
Domestic Sales

Dependent Variable: Change in Log (Domestic Sales) 1996-1992

	1	2	3	4	5	6
Change in Brazil's tariffs	0.396	0.310	0.274	0.321	0.313	0.428
	[0.252]	[0.192]	[0.190]	[0.178]*	[0.221]	[0.249]*
Change in Argentina's tariffs wrt world			-0.744	-0.616		
			[0.694]	[0.670]		
Change in Argentina's tariffs wrt Brazil					0.023	0.341
					[0.650]	[0.730]
FIRM level controls						
Log (Employment$_{1992}$)		-0.002	-0.003	-0.003	-0.002	-0.004
		[0.015]	[0.015]	[0.014]	[0.015]	[0.014]
Log (Productivity$_{1992}$)		-0.744	-0.740	-0.732	-0.744	-0.734
		[0.244]***	[0.244]***	[0.245]***	[0.244]***	[0.246]***
Log (Productivity$_{1992}$)^2		0.077	0.076	0.075	0.077	0.075
		[0.029]***	[0.029]***	[0.029]**	[0.029]***	[0.029]**
Skill Intensity		0.007	0.007	0.007	0.007	0.007
		[0.001]***	[0.001]***	[0.001]***	[0.001]***	[0.001]***
INDUSTRY level controls						
Demand elasticity				-0.023		-0.025
				[0.015]		[0.015]
US Capital intensity				0.069		0.072
				[0.047]		[0.047]
US Skill intensity				0.030		0.057
				[0.092]		[0.101]
II digit industry dummies	Yes	Yes	Yes	Yes	Yes	Yes
Observations	1388	1388	1388	1388	1388	1388
R-squared	0.06	0.13	0.13	0.13	0.13	0.13

Standard errors clustered at the IV-digit industry level
* significant at 10%; ** significant at 5%; *** significant at 1%